Planning Commission

CITY HALL COUNCIL CHAMBERS
AGENDA OF JULY 9, 2024
7:00 PM

ROLL CALL

PLEDGE OF ALLEGIANCE

APPROVAL OF MINUTES

Regular meeting of June 11, 2024

CORRESPONDENCE

Administrative Approvals & Zoning Certificates

1. PPZ2024-0250 Super 8 EV Charging Stations 32801 Lorain Rd
   Administrative approval of a Planning Commission application to install electric vehicle charging stations.

2. PPZ2024-0280 The Point Salon and Spa, 36000 Westminister Ave
   Approval of Zoning Certificate of Compliance for a Salon and Spa.

3. PPZ2024-0283 Sportsville, 37500 Center Ridge Rd, PPN 07-00-033-101-003
   Administrative approval of an Amendment application for change of building orientation.

4. PPZ2024-0284 Ridgeville Farms, 7691 Avon Belden Rd
   Administrative approval of an Amendment application to incorporate additional land into development.

5. PPZ2024-0285 KMVoice LLC, 5158 Mills Industrial Parkway
   Approval of Zoning Certificate of Compliance for Video Production Office

OLD BUSINESS

NEW BUSINESS

1. PPZ2024-0279 T.J.B. Incorporated, 33600 Liberty Parkway, PPN 07-00-008-115-059
   Applicant: Victor Krevinko, A.A., 423 Lombardy Dr, Berea, OH 44017. Proposal consists of constructing a 10,000 sq. ft. addition to existing building for storage. Property zoned I-2 Light Industrial District.

2. PPZ2024-0281 Pro Care, We Care, Aron A. Rus,35782 Center Ridge Rd, PPN 07-00-021-101-068
   Proposal consists of constructing a 9,000 square foot building, parking and landscape material storage. Property zoned B-3 Highway Commercial District and R-1 Residence District. **Note:** Planning Commission recommended rezoning portion of property zoned R-1 to B-3 on 5.14.2024.

ADJOURNMENT

NORTH RIDGEVILLE PLANNING COMMISSION
MINUTES OF REGULAR MEETING
TUESDAY, JUNE 11, 2024

CALL TO ORDER:

Vice-Chairman Schumann called the Planning Commission meeting to order with the Pledge of Allegiance at 7:00 PM.

ROLL CALL:

Present were members Steve Ali, Paul Graupmann, Council Liaison Bruce Abens and Vice-Chairman Paul Schumann.

Chairman James Smolik was excused.

Also present were Assistant Law Director Toni Morgan, City Engineer Christina Eavenson, Planning and Development Director Kimberly Lieber and Deputy Clerk of Council Tina Wieber.

MINUTES:

Vice-Chairman Schumann asked if the members had a chance to review the minutes of the regular meeting on May 14, 2024. He asked if there were any corrections. Hearing none, the minutes were approved.

CORRESPONDENCE:

Administrative Approvals & Zoning Certificates

1. PPZ2024-0270 Meligun, LLC, 37152 Sugar Ridge Rd
   Approval of a Certificate of Zoning Compliance for a small firearms manufacturer.

2. PPZ2024-0271 Liberty Parkway HRD, LLC, 6287 Lear Nagle Rd
   Administrative approval of a Planning Commission application for exterior building alterations.

3. PPZ2024-0274 Shipme, LLC, 34125 Center Ridge Rd
   Approval of a Certificate of Zoning Compliance for a packing and shipping retail store.

4. PPZ2024-0245:SportsVille, 37500 Center Ridge Rd, PPN 07-00-033-101-003
   Administrative approval of a Planning Commission application to construct an equipment storage building.

Vice-Chairman Schumann asked Director Lieber if she would review the administrative approvals.

Director Lieber stated that there were two certificates of zoning compliance for new businesses that were approved with one being Mulligan on Sugar Ridge Road, a firearms manufacturer, and ShipMe, which was a packing and shipping retail store. She mentioned that there were also two administrative approvals for building alterations or additions and was the first on Liberty Parkway. She said that the applicant wanted to just replace some of the exterior building materials, add some overhead doors and refresh the paint on the building. She explained that the other approval was SportsVille and that it was

originally on the agenda for the Commission's review, however, the project was entirely zoning compliant. She stated that they would be installing a metal pole storage building on the property to replace an area where they currently had bins for sand and other materials.

OLD BUSINESS:

NEW BUSINESS:

PPZ2024-0257: Elite K911, 31740 Cook Rd, PPN 07-00-004-110-038
Applicant: Heller Carpentry and Handyman, LLC, 227 Main St, Apt. 327, Westlake, OH 44145. Owner: Chuck Stella, 31684 Cook Rd, North Ridgeville, OH 44039. Proposal consists of constructing an addition to existing building for grooming facility. Property zoned B-3 Highway Commercial District.

Application was read.

Vice-Chairman Schumann asked Director Lieber to discuss her Planning Review.

Director Lieber stated that she had been in contact with the applicant and his design professional since the last meeting to collect the additional information requested by the Commission and by staff. She explained that they had a couple rounds of e-mails back and forth where they pooled that information from both the site plan and the building elevation. She added that she had prepared a report on June 5th based upon the information she had at the time and sent that report to Tina but then later that day they received another update from the applicant and unfortunately her most recent report didn't capture all of the changes that had been made. She mentioned that that regarding the building elevations, those were revised and resubmitted May 24th and that sheet A2 had been revised to incorporate all the discussed building changes and colors. She stated that the applicants indicated that no lighting was proposed, so the elevation seemed complete. She said that the site plans were also revised and resubmitted to the City first on May 22nd and then recently on June 5th. She indicated that the question that they had about the drive aisle in relationship to the parking spaces and that had been resolved. She stated that she had a comment about plan notes indicating that there was going to be a shed removed and relocated but that it wasn't clear if that was the current or the future location. She mentioned that in looking at the updated plan, it looked like the shed had been removed from that location but that it didn't appear a new location had been identified, unless she was just not seeing it on the site plan or that perhaps they just had a partial site plan.

Mr. Stella stated that it was on the drawing back by the pool.

Director Lieber stated that she did locate it back by the pool and that resolved that comment. She indicated that what had slipped her attention until just in preparation for the meeting was that there was now a proposed dumpster enclosure. She mentioned that it was brought up to the owner previously that if they intended to have a permanent dumpster on the site, that code required that it be enclosed and screened. She added that she wanted to point out that that dumpster enclosure has appeared on that June 5th rendering and that it was near the end of the emergency access drive, which was quite a distance away from the commercial piece of the property or where the business was located. She explained that she was just curious as to why that location was selected and that it would seem appropriate to have that location be closer to the business that it was serving rather than to the house. She added that if they were move it closer to the commercial business, they would want to keep the commercial traffic on the paved

DRAFT

portion or on the pavement, and that then the other structures would also help screen that from being in open view from the street.

City Engineer Eavenson stated that she did appreciate the larger scale drawings that they did make it much easier for reading and would also be most helpful to the engineering review and for their records. She said that there were a couple of items that she hadn't had the opportunity to discuss with him but that now maybe he might be able to lend some additional information. She indicated that she did have a little bit of concern for the infiltration trench that was addressing the water quality measure they had originally asked him to account for in the pre-hearing meeting. She stated that it appeared that it might be under the kennels or in the kennel area and asked if it was going to be behind the kennels.

Mr. Stella commented that yes, it looked like it was placed behind the kennel.

City Engineer Eavenson stated that she just wanted to make sure that it wasn't in the kennel area because that could be a sanitation issue and wanted to make sure.

Mr. Stella stated that yes, it would be behind the kennels.

City Engineer Eavenson asked about the fencing that was there and if it would be relocated.

Mr. Stella indicated that there was fencing there and that it was going to be relocated for the new building.

City Engineer Eavenson asked that he indicate that in the final drawings. She noted that it did actually say remove and reconfigure, so as long as that was out of the infiltration trench, she thought that was acceptable.

Mr. Stella asked if the infiltration ditch should be after the kennels and before the creek.

City Engineer Eavenson stated that was correct. She asked if he would speak on behalf of his maintenance measures for the kennels. She commented that she would assume the animals used the restroom in those kennel facilities.

Mr. Stella stated that they did and that they cleaned them three times a day. He explained that they cleaned them in the morning when they pooped immediately. He went on to state that when they took the dogs out, they took them out in stages and would clean that up immediately because they would step in it or they would eat it. He added that they were on that right away and didn’t leave any poop down ever. He stated that that was one of their policies to always clean up.

City Engineer Eavenson asked if there was some sort of measure that he could put in on the last leg of the fence line of the kennels to maybe just ensure prevention of a washout.

Mr. Stella commented that whatever she recommended he would do but that it was 57 limestone for the trench itself.

City Engineer Eavenson stated that she just wanted to ensure that there wouldn't be any runoff from the

DRAFT

kennel area that might make it into the trench, but they could discuss that during the final review.

Mr. Stella stated that he didn't think that would be an issue and was sure they could come up with something like a berm of some kind. He mentioned that urine would be an issue obviously to collect, but as far as feces, that was not left down but was disposed of.

City Engineer Eavenson stated that they would talk a little bit more about that during the final permit process. She asked if he would speak a little bit to the emergency access drive. She commented that she did see that he had signage there, but she did have a little bit of concern of ensuring that that was visible to the emergency services. She asked if he had given any thought to perhaps some staking that would tell the fire department that it was there.

Mr. Stella stated that they could put signage at both ends.

City Engineer Eavenson commented that she did see that he had signage but maybe also some additional staking or fluorescent markers, driveway markers to that as well.

Mr. Stella stated that he would do anything that was required and had planned on landscaping that, so that in the wintertime they would see that as well.

City Engineer Eavenson commented that she just thought some simple measures might help to accentuate that area just a little bit better. She discussed that she did get a copy of his wetlands permit from the Army Corps but asked if that work was finished because it didn't allude to it on the revised plans. She asked if that work was all finished and if the culvert went in for the stream.

Mr. Stella stated that it wasn't. He said that they were not going to build the bridge. He remarked that he always said bridge but did mean the culvert. He added that he didn't have the money to build a bridge at this point.

City Engineer Eavenson stated that they just wanted to be able to gain access to the back property.

Mr. Stella stated that the culvert pipe and backfill would be it, at least at that point. He added that the bridge would go in at some point down the road.

City Engineer Eavenson asked that when he intended to do that work, to reconnect with the Army Corps, because she thought that permit was expired.

Mr. Stella stated that he didn't know if it was but he didn't think it expired.

City Engineer Eavenson asked if he had submitted this completion form because it looked like he may have signed the completion form.

Mr. Stella stated that he didn't know.

City Engineer Eavenson asked if maybe he didn't turn it in.

DRAFT

Mr. Stella explained that he thought he signed it but didn't really know what it was and did not turn it in.

City Engineer Eavenson asked if he did not submit it.

Mr. Stella commented that he didn't know he wasn't supposed to sign it until it was completed.

City Engineer Eavenson So usually they do have terms on him on here for a length of time that they're valid and she asked that he review that to ensure that if he had exceeded his time period, he would ask for an extension if he wanted to do the work.

Vice-Chairman Schumann asked Mr. Stella if he wanted to discuss that Administrations comments.

Mr. Stella stated that he was aware that his neighbor had an issue with the dumpster, but he didn't know what to do with that dumpster. He stated that of all the property that he had there, he had no place to put that dumpster. He commented that the only place that he could put that dumpster that was reasonable was pretty far away from the building. He stated that he did have a golf cart and a wheelbarrow and that his maintenance guy would generally take the wheelbarrow, load the bags of poop and take them over there. He commented that other than that, it was just a short walk. He stated that he had no place to put that dumpster that wouldn't crush his concrete. He stated that originally where the dumpster was, he had 6-inch concrete poured there and then when he added the parking lot, he had plans of expanding on the back property and he thought the dumpster would go back past the wetlands. He added that since that project can't go forward financially, he was stuck putting the dumpster at the end of the gravel driveway. He stated that the gravel driveway, of course, was going to be concrete, but there had to be at least 6 inches of it to hold for the trash trucks.

Vice-Chairman Schumann asked what the neighbor's issues were

Mr. Stella stated that his neighbor across the street was tired of looking at the dumpster and that he was that he was as well. He mentioned that he could see it from my his kitchen window and he wasn't thrilled about it either. He stated that the goal was to figure out where that was going to finally go, but he had to wait for the fire truck access road before making a plan where that was going to go. He pointed to the drawing and stated that if the fire access road was going to go where it said on the drawing, if they were good with that, then then he was going to put the dumpster there and enclose it and would do that immediately.

Vice-Chairman Schumann asked about placing some arborvitaes around it or something like that.

Mr. Stella stated that he was going to. He said that they always planted bushes and all that. He added that he was thinking about a vinyl fence and then some evergreens or something around that.

Vice-Chairman Schumann asked what material he was talking about for the enclosure and that it looked like vinyl fencing.

Mr. Stella stated there were vinyl panels that he could buy that were pre-made. He stated that he didn't know if he would have to go all the way around it, but he would need at least four panels plus the doors, to keep anybody from looking at it. He stated that the backside would be facing the wetlands.

DRAFT

Vice-Chairman Schumann asked Director Lieber if that would be acceptable.

Director Lieber stated that a four-sided enclosure was required, but if the Commission was going to require landscaping, she asked that they be specific about what and where they wanted that.

Mr. Stella stated that he could do four sides and it wouldn't be more than a couple panels.

Director Lieber asked if he clarified whether he intended to pave the driveway.

Mr. Stella stated that paving might be an option, but concrete was probably what he was going to be doing for the gravel road, the existing gravel road. He mentioned that he might have to go with asphalt, but it just depended on how it worked out financially.

Director Lieber stated that either way, concrete or asphalt, the emergency access drive was being proposed as it was just to provide connectivity but if it were a commercial property, they did require any parking or drive surface to be paved, so if that was going to be the permanent location of the dumpster and it was going to get commercial vehicle traffic to empty the dumpster, then the route to that dumpster should also be paved, not gravel. She mentioned that if the applicant was indicating that he intended, whether it's asphalt or concrete, he was going to pave the driveway, then her concerns were less than if it were not intended to be paved.

Vice-Chairman Schumann stated that the plan showed exterior gravel drive.

Mr. Stella stated that that was current and temporary.

Vice-Chairman Schumann stated that it was existing gravel drive not exterior.

Mr. Stella stated that he put that in last year to access the back property.

Vice-Chairman Schumann commented that the emergency access drive was going to be concrete or asphalt.

Mr. Stella stated, no, that it would be Geocell, if they were still on the same page. He commented that it would be Geocell and grass and that it would just be maintained as a safety access road.

Vice-Chairman Schumann asked which side the dumpster opened on.

Mr. Stella showed Vice-Chairman Schumann on the drawing where it would open.

Vice-Chairman Schumann stated that maybe he could put some arborvitaes across this side.

Mr. Stella stated that he could see it from his kitchen window.

Vice-Chairman Schumann commented that it would be nicer for him too, then.

Mr. Stella stated that he knew his neighbor was upset about it, but he didn't have a permanent location.

DRAFT

Vice-Chairman Schumann asked if there were any questions from the Commission.

None were given.

Vice-Chairman Schumann asked if there were any questions from the public.

None were given.

Council Liaison Abens asked about the gravel drive and if he was planning on paving that over.

Mr. Stella stated that he was planning on concreting it. He mentioned that he might have to pave it just for financial reasons, but yes, it would be a hard surface.

Council Liaison Abens commented that if he left it gravel, with it being used, he was going to send up dust.

Mr. Stella stated that he was told he couldn't keep it gravel to begin with, so even when he put it in, he knew that was temporary.

Council Liaison Abens stated that if not, he would hear from his neighbors.

Mr. Stella stated that his wife hated it and that she hated driving up and down the gravel driveway.

Council Liaison Abens asked regarding the western side of the property, how would the fire department access that side of the building in case of a fire, because it didn't look like they could get a truck there.

Mr. Stella stated that there was a driveway there that was his neighbor's and that would be the only access. He added that they hadn't discussed the fire hydrant yet.

Council Liaison Abens stated that he saw that he had installed one on his property and asked if that was correct.

Mr. Stella stated that he had not yet, but he would. He mentioned that it would be right in the front yard, which put him within that 300-feet of any portion of the building.

Vice-Chairman Schumann asked that if that was getting paved, was that clear to Director Lieber, that that existing gravel drive was going to get paved.

Director Lieber stated that she would always encourage the Commission to add in their motion whatever conditions they felt were necessary, just to ensure that they had record of it.

Vice-Chairman Schumann asked Mr. Stella if he had any problem with throwing a couple arborvitaes around the dumpster enclosure and asked how big it was.

Mr. Stella stated that the dumpster was not very big, and the enclosure was probably going to be 10 feet. He stated that the panels were 6 feet, so it might end up being 12 foot overall. He discussed that he would

DRAFT

put in at least three, three 4 footers on at least two of the sides, the side that he looked at and the side the neighbor looked at.

Vice Chairman Schumann commented that they were talking about 6 of them.

Mr. Stella stated that that sounded about right.

Vice-Chairman Schumann asked regarding the infiltration trench, did they have to bring that up at all in the conditions.

City Engineer Eavenson stated that they still had the engineering review to do, so she thought the details of that could be worked out during the final engineering review.

Vice -Chairman Schumann asked if there were any further questions or comments.

Member Ali stated that the only thing he would recommend with the dumpster, just to use concrete, because those trucks got very heavy and so that he didn't get ruts instead of asphalt. He stated that around the approach to it, he would put 6 to 8 inches of concrete.

Mr. Stella commented that he thought the drawing specs out the concrete, 6-inch concrete for the pad and apron.

> Motion made by Schumann and seconded by Graupmann to approved application PPZ2024-0257 subject to the conditions of six arborvitaes be added to the plan for the dumpster enclosure and that the existing gravel drive on the east side of the property be either finished in concrete or asphalt.

A roll call vote was taken and the motion carried.

> Yes – 4 No – 0

Vice-Chairman Schumann asked if there were any further business to come before the Commission.

None was given.

ADJOURNMENT:

> Vice-Chairman Schumann adjourned the meeting at 7:25 PM.

James Smolik
Chairman

Tina Wieber
Deputy Clerk of Council

Tuesday, July 9, 2024
Date Approved

DRAFT

RECEIVED
JUN 1 1 2024

Planning Commission Application

CITY OF NORTH Ridgeville EST 1810

SUBMITTAL INSTRUCTIONS AND PROCEDURES

Plan reviews will be carried out according to the processes described in the City's Zoning Code.

- Pre-Application. Prior to making application, applicants are recommended to contact the city to discuss their development project. City staff will outline the review process and provide a checklist of required submittals.
- Application Submittal. Following the pre-application meeting, the applicant shall submit this completed application, fee and ten (10) sets of all required exhibits. All submissions shall be made in hard copy to the Building Department. Plans shall be collated, folded and easily legible.
- Staff Review. The applicant shall attend a staff review meeting and may be required to submit additional information and/or revised plans based on staff input.
- Variances. Where zoning variances are sought by the applicant, review by the Board of Zoning and Building Appeals will be necessary prior to consideration by the Planning Commission, requiring a separate application.
- Decision or Referral. Following staff review, complete submittals for Administrative Review projects may be considered for approval. For Council Review projects, complete submittals shall be referred to the next available Planning Commission meeting, which are held the second Tuesday of each month.

PROJECT INFORMATION

33600 Liberty Pky. North Ridgeville, Ohio 44039
Location address

07-00-008-115-059
Parcel number

Current zoning

10,000 sq. ft Addition to the existing Building
Proposed project

APPLICANT/AGENT INFORMATION

Victor P. Krevinko AIA
Name/Company

423 Lombardy Dr. Berea, Ohio 44017
Applicant address

440 666 4121
Applicant phone

vkrevinko@hotmail.com + vkrevinko@CPLTEAM.com
Applicant email

PROPERTY OWNER INFORMATION

T.J. B Incorporated
Name/Company

33600 Liberty Pky North Ridgeville, Ohio 44039
Property owner address

440 327-6154
Property owner phone

djfiske@tjb-couplers.com
Property owner email

AUTHORIZATION AND ACKNOWLEDGEMENT

Victor P Krevinko
Applicant signature

Property owner signature

440 498.2042

I hereby authorize the City of North Ridgeville, including Planning Commission members, to view the premises and consent to their entry onto the property for the purpose of observing site conditions related to review of my application.

OFFICE			ACTION
PPZ No. PPZ2024-0279	Date Received JUN 1 1 2024		
Planning Fee Paid $150.00 Visa	Engineering Fee Paid		

Planning Commission Comment Sheet

PROJECT INFORMATION

Construct a 10,000 sq ft addition to existing building	
Proposed project	
33600 Liberty Pkwy	07-00-008-115-059
Location	Parcel number
July 9, 2024	June 27, 2024
Meeting date	Comments due

RECOMMENDATIONS

RECOMMENDATIONS

Please contact Asst. Chief Mike Uhnak of the North Ridgeville Fire Department to discuss the following code requirements of the Ohio Fire Code and Ch. 16 Fire Prevention of the Codified Ordinance of North Ridgeville.
North Ridgeville Fire Department
Fire Prevention
(440)653-6362

1- OFC Rule 5 Fire Service Features-
   Section 506: Fire Department Lock Box.
   Section 503: Fire Access Roads: Fire Department Access must not be longer than 150ft without a turn around.
   Section 507: Fire Protection Water Supply
2- OFC Rule 33 Fire Safety During Construction
3- NFPA 241 Standards for Safeguarding Construction Operations.
4- Chapter 16 Fire Prevention NR Ordinance.
   1640.01: Fire Hydrants: All portions of the building must be within 300ft of a fire hydrant.

Respectfully

Asst. Chief Mike Uhnak

SUBMITTED BY

Asst. Chief Mike Uhnak	Asst. Chief
Administrative officer signature	Title

Planning Commission Bylaws Article V Section 2 – Administrative Review. All applications including those plans and maps submitted to the Commission shall be referred to Administrative Officers. Comments and recommendations by Administrative

Officers, if any, shall be forwarded to the Secretary not later than ten (10) calendar days after receipt. Administrative Officers who have not acted within the allotted time shall be deemed to have concurred with plans as submitted.

Planning Commission Comment Sheet

CITY OF NORTH Ridgeville EST 1810

PROJECT INFORMATION

Construct a 10,000 sq ft addition to existing building

Proposed project

33600 Liberty Pkwy	07-00-008-115-059
Location	Parcel number
July 9, 2024	June 27, 2024
Meeting date	Comments due

RECOMMENDATIONS

Type comments here. Attach additional sheets as necessary.

Limited information submitted. No comment at this time.

SUBMITTED BY

Guy M. Fursdon	Chief Building Official
Administrative officer signature	Title

Planning Commission Bylaws Article V Section 2 – Administrative Review. All applications including those plans and maps submitted to the Commission shall be referred to Administrative Officers. Comments and recommendations by Administrative Officers, if any, shall be forwarded to the Secretary not later than ten (10) calendar days after receipt. Administrative Officers who have not acted within the allotted time shall be deemed to have concurred with plans as submitted.

JUN 1 1 2024

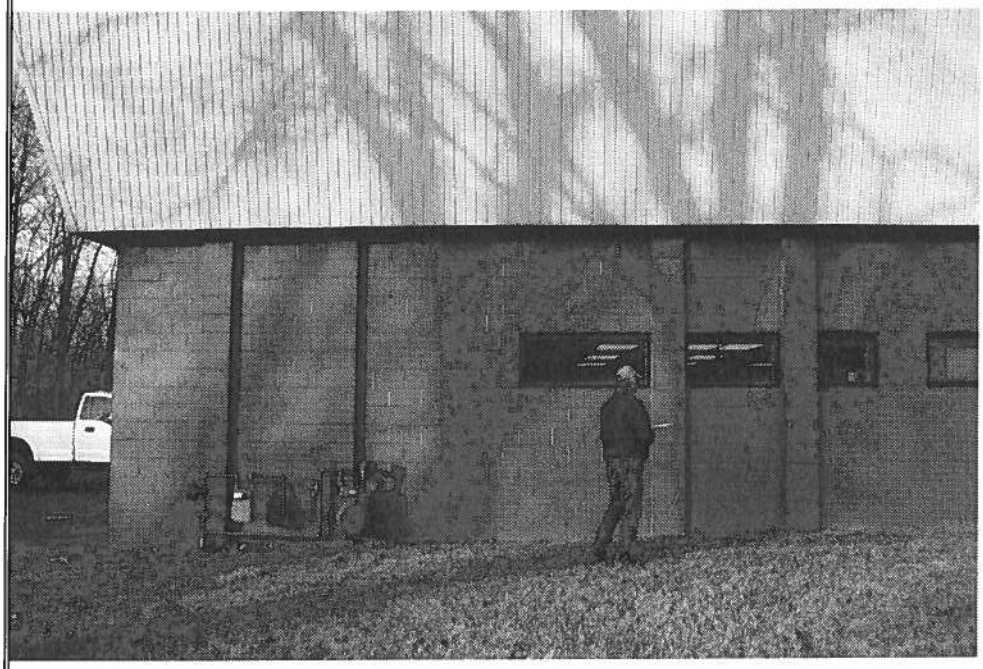

Description:

The building partial front elevation South West corner of the Building

Photo Number
1

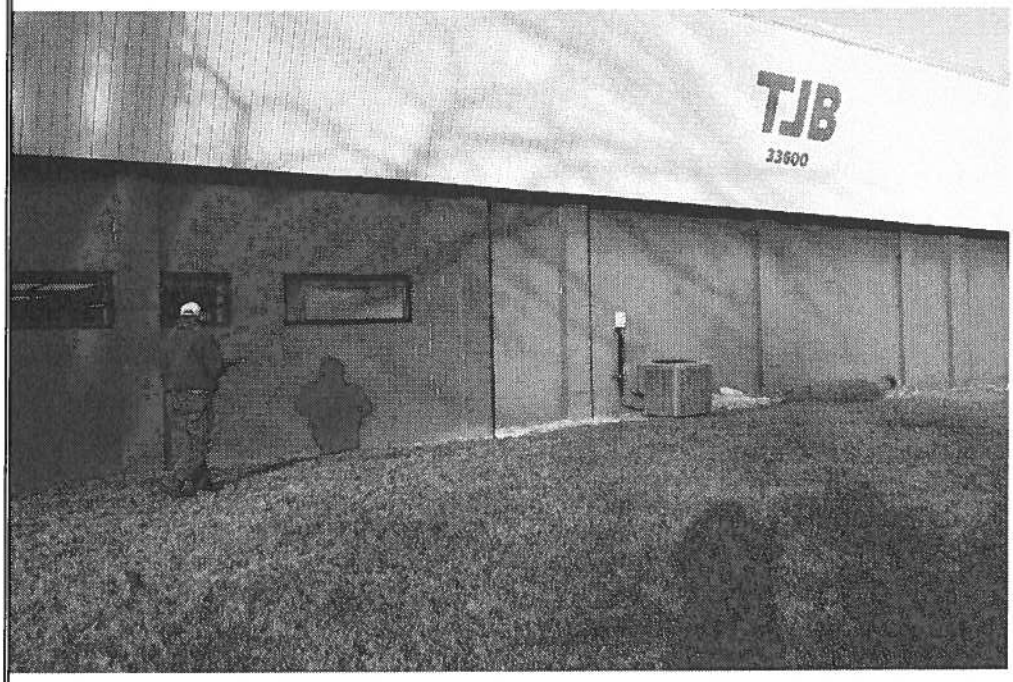

Description:

South East Front elevation

Photo Number
2

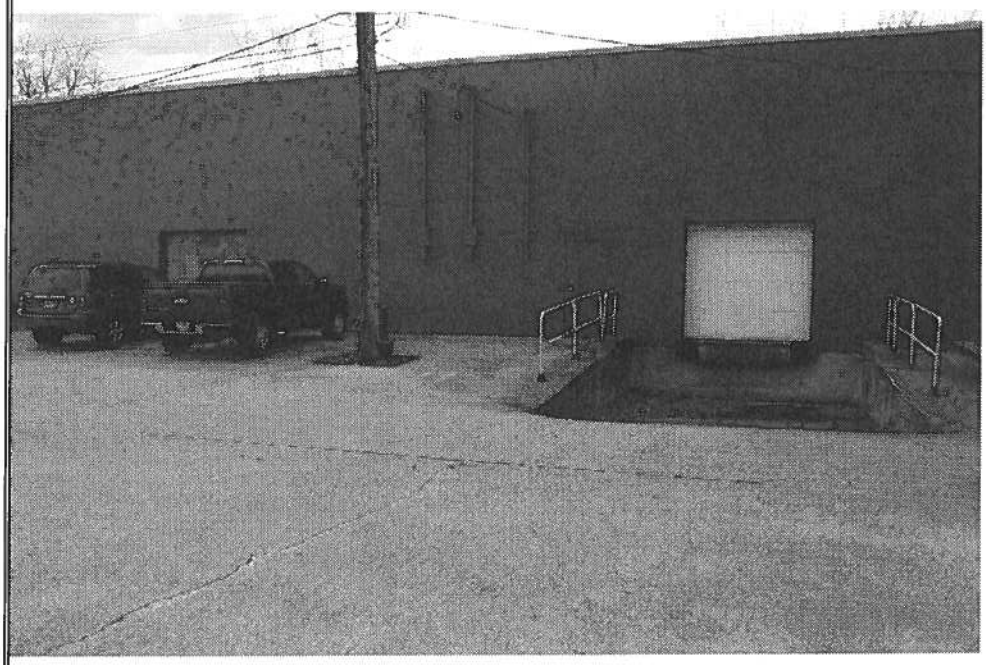

Description:

West side Elevation

Photo Number

3

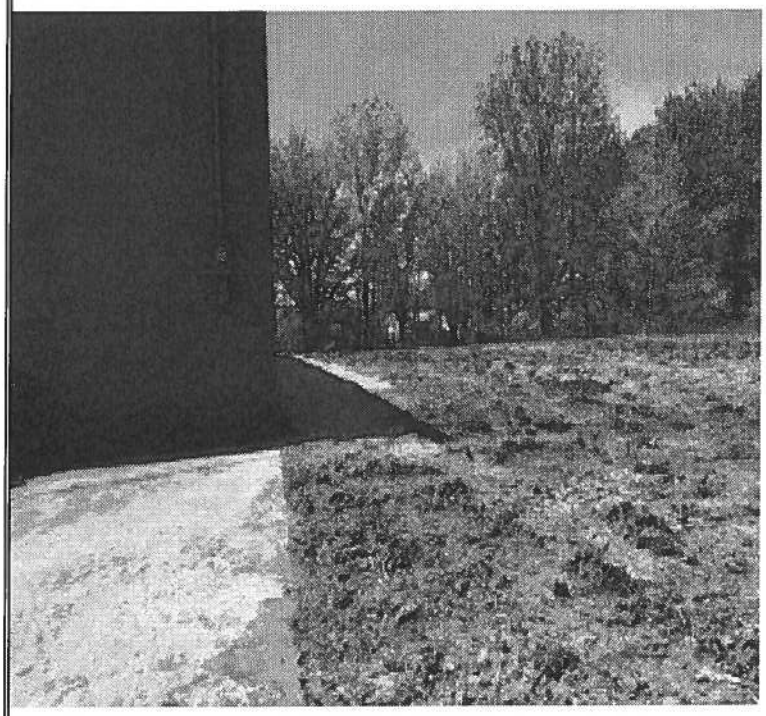

Description:

New building to be adjoined to the existing Warehouse Building

Photo Number

4

Description:

West side front elevation..

Photo Number

5

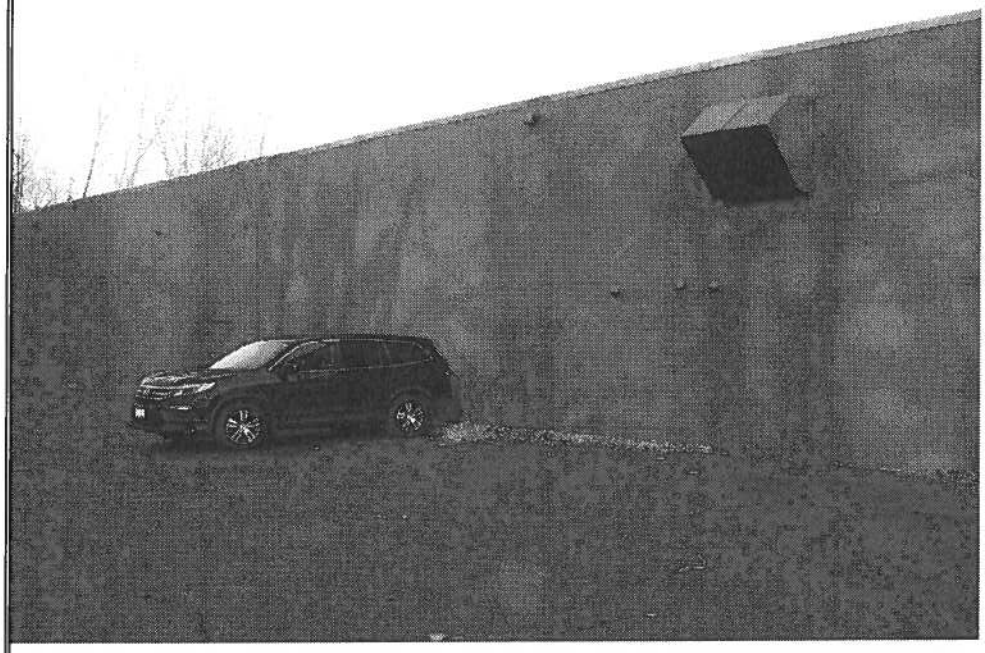

Description:

West Elevation with Employee Parking

Photo Number

6

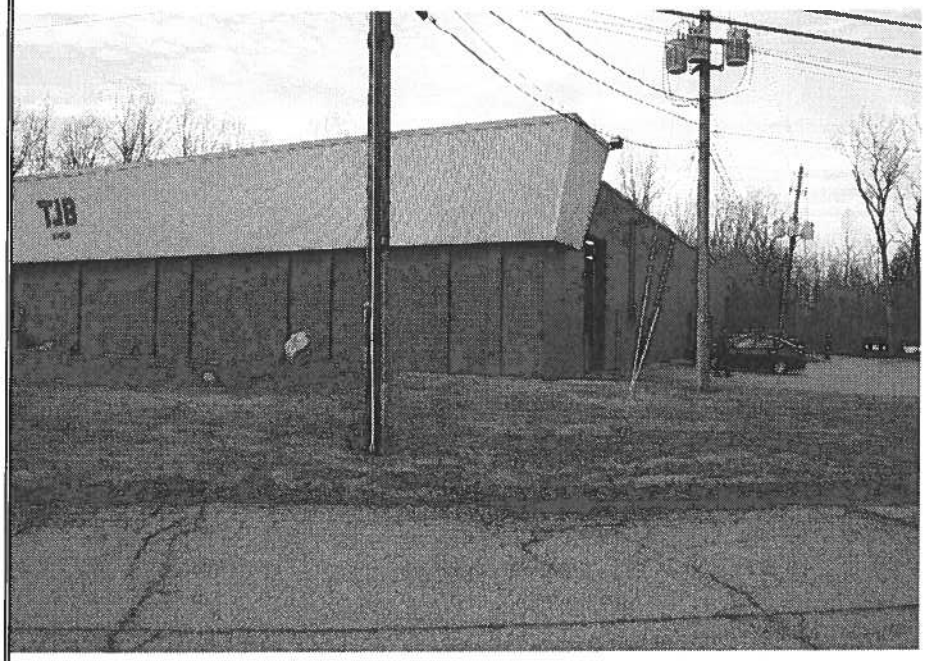

Description:

South and East Elevation

Photo Number
7

Description:

Rear of the Property

Photo Number
8

Description:

Steel I beams are the devices that are used to carry the scaffolding and counterbalance the operation.

Photo Number
9

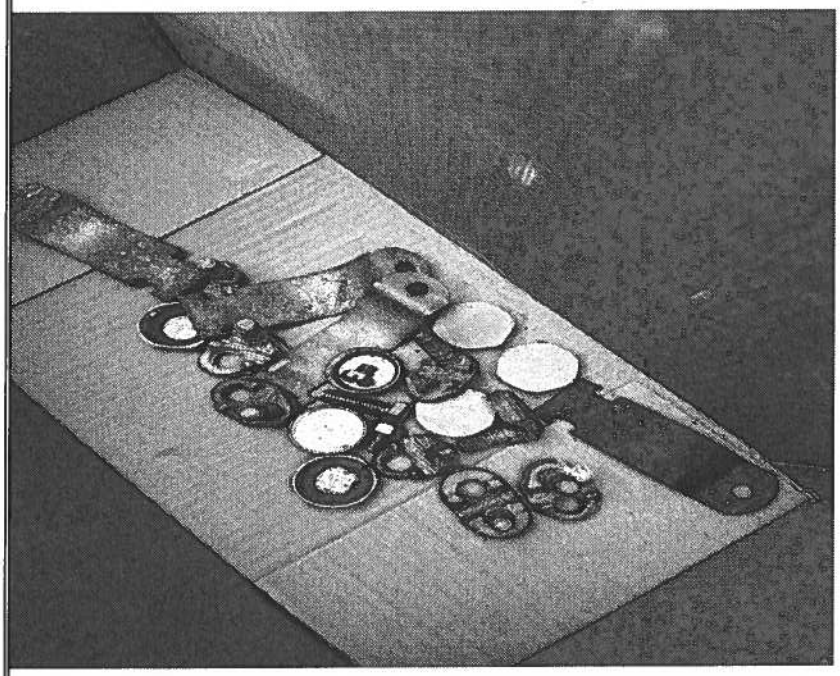

Description:

Metal objects were also found and penetration into the membrane have occurred. Note other contractors are suspect to minor abrasions and penetrations.

Photo Number
10

Description:

Roof debris were found on both buildings coming from multiple contractors.

Photo Number
11

Description:

Shown here are multiple penetrations, some drilled and some damage from other objects.

Photo Number
12

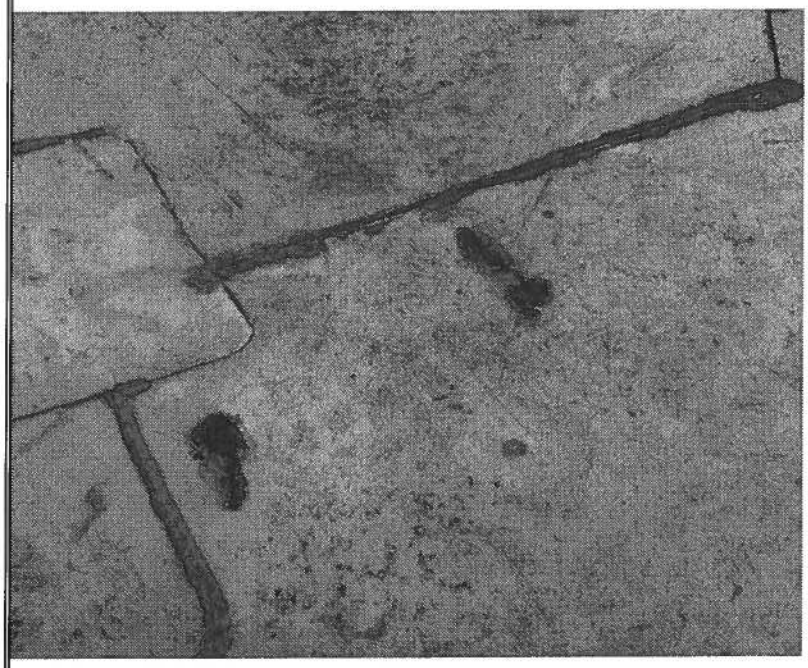

Description:

Multiple uncovered openings were found.

Photo Number
13

Description:

Perimeter condition is typical on each building and that is the raised parapet condition and flashing that is properly installed.

Photo Number
14

Description:

The moisture meter set in forty different locations shows high moisture content.

Photo Number

15

Performance Data

Lumen Output

Lumen values are from photometric tests performed in accordance with IESNA LM-79-08. Data is considered to be representative of the configurations shown, within the tolerances allowed by Lighting Facts. Contact factory for performance data on any configurations not shown here.

Performance Package	System Watts	30K (3000K, 80 CRI)		40K (4000K, 80 CRI)		50K (5000K, 80 CRI)	
		Lumens	LPW	Lumens	LPW	Lumens	LPW
P1	65W	8,450	130	8,800	135	8,800	135
P2	79W	10,200	129	10,650	135	10,650	135
P3	97W	12,300	127	12,900	133	12,900	133
P4/ALO	108W	13,250	123	13,850	128	13,850	128

Electrical Load

Performance Package	System Watts	Current (A)				
		120V	208V	240V	277V	347V
P1	65W	0.538	0.310	0.269	0.233	0.186
P2	79W	0.656	0.379	0.328	0.284	0.227
P3	97W	0.806	0.465	0.403	0.349	0.279
P4/ALO	108W	0.900	0.519	0.450	0.390	0.311

Adjustable Lumen Output (ALO) Table

Setting	System Watts	Lumen Output	Replaces Metal Halide
8*	108W	13,850	400W
7	102W	13,250	
6	85W	11,400	
5	71W	9,900	
4	57W	8,200	250W
3	44W	6,450	
2	29W	4,500	150/175W
1	18W	2,900	100W

* Factory default setting is #8

Lumen Ambient Temperature (LAT) Multipliers

Use these factors to determine relative lumen output for average ambient temperatures from 0-40°C (32-104°F).

Ambient		Lumen Multiplier
0°C	32°F	1.04
10°C	50°F	1.03
20°C	68°F	1.01
25°C	77°F	1.00
30°C	86°F	0.99
40°C	104°F	0.97

Projected LED Lumen Maintenance

Data references the extrapolated performance projections for the platforms noted in a 25°C ambient, based on 10,000 hours of LED testing (tested per IESNA LM-80-08 and projected per IESNA TM-21-11).

To calculate LLF, use the lumen maintenance factor that corresponds to the desired number of operating hours below. For other lumen maintenance values, contact factory.

Operating Hours	0	25,000	50,000	60,000	100,000
Lumen Maintenance Factor	1.0	>0.95	>0.90	>0.88	>0.81

Photometric Diagrams

To see complete photometric reports or download .ies files for this product, visit the Lithonia Lighting TWX LED homepage. Tested in accordance with IESNA LM-79 and LM-80 standards

LEGEND

- 0.25 fc
- 0.5 fc
- 1.0 fc
- 3.0 fc

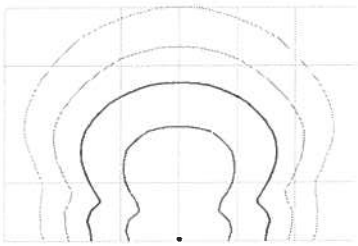

MH = 18ft
Grid = 18ft x 18ft
ISO lines = 0.25fc, 0.5fc, 1.0fc, 3.0fc

TWX3 LED ALO

© 2020-2022 Acuity Brands Lighting, Inc. All rights reserved.

TJB, INC.
33600 LIBERTY PARKWAY
P.P.N. 07-00-008-115-059
PROPOSED SITE EXPANSION PROJECT

CITY OF NORTH RIDGEVILLE
COUNTY OF LORAIN, STATE OF OHIO
PRELIMINARY PLANS
MAY 15, 2024

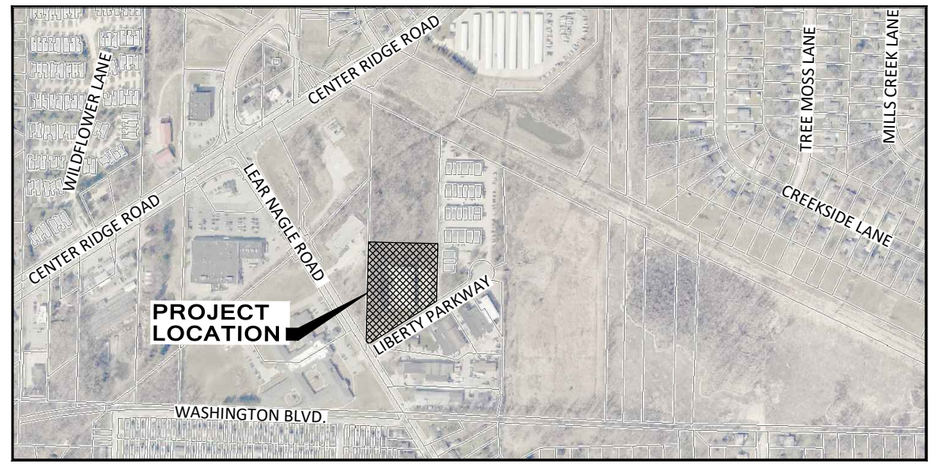

N

LOCATION MAP
(NTS)

THE CONTRACTOR SHALL CONTACT THE OHIO UTILITIES PROTECTION SERVICES (OUPS, AT LEAST 48 HOURS BEFORE CONSTRUCTION BEGINS AT 1-800-362-2764. AGENCIES AND UTILITY COMPANIES TO BE NOTIFIED INCLUDE BUT ARE NOT LIMITED TO THE FOLLOWING:

CITY OF NORTH RIDGEVILLE
7307 AVON BELDEN ROAD
NORTH RIDGEVILLE, OHIO 44039
CONTACT: CHRISTINA EAVENSON, P.E.
PHONE: (440) 353-0842

FRENCH CREEK WASTEWATER
TREATMENT PLANT
SHEFFIELD VILLAGE, OHIO 44054
CONTACT: COREY TIMKO
PHONE: (440) 934-5251
FAX: (440) 934-2008
ctimko@nridgeville.org

COLUMBIA GAS OF OHIO
NEW BUSINESS DEVELOPMENT
3101 NORTH RIDGE ROAD
LORAIN, OHIO 44055
CONTACT: JANINE MAWSON
PHONE: (440) 752-2649
jmawson@nisourse.com

FIRST ENERGY/OHIO EDISON COMPANY
6326 LAKE AVENUE
ELYRIA, OHIO 44035
PHONE: (800) 633-4766

OHIO UTILITIES PROTECTION
SERVICE (OUPS)
12467 MAHONING AVENUE
NORTH JACKSON, OHIO 44451
PHONE: (800) 362-2764

OIL & GAS PRODUCERS UNDERGROUND
PROTECTION SERVICE (OGPUPS)
88 EAST BROAD STREET, SUITE 1400
COLUMBUS, OHIO 43215
PHONE: (800) 925-0988

SPECTRUM
BUSINESS DEVELOPMENT SPECIALIST
CHARTER COMMUNICATIONS
1200 BROWNSTONE AVENUE
AKRON, OHIO 44310
PHONE: (330) 572-4129

CENTURYLINK
203 WEST 9TH STREET
LORAIN, OHIO 44052
PHONE: (440) 641-0188

INDEX OF SHEETS

TITLE SHEET 1
GENERAL NOTES 2
TYPICAL SECTIONS 3
EXISTING CONDITIONS PLAN 4
SITE PLAN 5
UTILITY/GRADING PLAN 6
MISCELLANEOUS DETAILS 7
STORMWATER MANAGEMENT PLAN 8-9
SWPPP NOTES 10-13

OWNER:

TJB REALTY INVESTMENTS LLC
33600 LIBERTY PARKWAY
NORTH RIDGEVILLE, OHIO 44039

PREPARED FOR:

TJB, INC.
DJ FISKE, GENERAL MANAGER
33600 LIBERTY PARKWAY
NORTH RIDGEVILLE, OHIO 44039

PREPARED BY:

EUTHENICS
8235 MOHAWK DRIVE., STRONGSVILLE, OHIO 44136

STATE OF OHIO
EDWARD R. PIATAK
62761
REGISTERED
PROFESSIONAL ENGINEER

EDWARD R. PIATAK, P.E.
REGISTERED ENGINEER NO. 62761

DATE

ZONING: LIGHT INDUSTRIAL DISTRICT (I-2) - ORD. 915-73

CALCULATED VMB
CHECKED ERP

TITLE SHEET

NORTH RIDGEVILLE

1
13

F:\Jobs\1254-TJB Site Expansion\Design\Sheets\1254_TT001.dwg 14-May-24 9:50 AM

GENERAL NOTES

ALL WORK SHALL CONFORM TO THE SPECIFICATIONS AND STANDARD CONSTRUCTION DETAILS OF THE CITY OF NORTH RIDGEVILLE AND THE 2023 STATE OF OHIO DEPARTMENT OF TRANSPORTATION, CONSTRUCTION AND MATERIAL SPECIFICATIONS.

IT SHALL BE THE CONTRACTOR'S RESPONSIBILITY TO OBTAIN ALL NECESSARY PERMITS AND APPROVALS PRIOR TO BEGINNING ANY CONSTRUCTION AND TO SECURE THE REQUIRED INSPECTION DURING CONSTRUCTION.

ALL UTILITIES SHOWN ON THESE PLANS HAVE BEEN LOCATED FROM RECORD DRAWINGS. IT IS THE RESPONSIBILITY OF THE CONTRACTOR TO LOCATE ALL EXISTING UTILITIES AS TO LINE AND GRADE BEFORE CONSTRUCTION BEGINS. ANY UTILITIES ENCOUNTERED IN THE FIELD THAT ARE NOT AS SHOWN SHOULD BE BROUGHT TO THE ATTENTION OF THE ENGINEER IMMEDIATELY.

THE CONTRACTOR SHALL CONTACT THE OHIO UTILITIES PROTECTION SERVICES (OUPS, AT LEAST 48 HOURS BEFORE CONSTRUCTION BEGINS AT 1-800-362-2764.

BEST MANAGEMENT PRACTICES SHALL BE USED FOR THE CONTROL OF EROSION ON THE SITE.

AGENCIES AND UTILITY COMPANIES CAN BE FOUND ON THE TITLE SHEET.

ALL POINTS OF CONNECTION OF PROPOSED IMPROVEMENTS TO EXISTING FACILITIES SHALL BE UNCOVERED AND ELEVATIONS VERIFIED BY FIELD CHECK BEFORE ANY CONSTRUCTION BEGINS.

THE CITY OF NORTH RIDGEVILLE ENGINEER SHALL BE NOTIFIED 48 HOURS IN ADVANCE BEFORE THE START OF CONSTRUCTION OF THE STORM SEWER.

ALL PAVEMENT CONSTRUCTION SHALL BE IN ACCORDANCE WITH THE CONSTRUCTION AND MATERIAL SPECIFICATION OF THE STATE OF OHIO DEPARTMENT OF TRANSPORTATION.

CLEAR AND GRUB SITE AS NECESSARY TO INSTALL PROPOSED IMPROVEMENT.

SURVEYING PARAMETERS

PRIMARY PROJECT CONTROL MONUMENTS GOVERN ALL POSITIONING ON THIS PROJECT.

USE THE FOLLOWING PROJECT CONTROL, VERTICAL POSITIONING, AND HORIZONTAL POSITIONING PARAMETERS FOR ALL SURVEYING:

PROJECT CONTROL
- POSITIONING METHOD: ODOT VRS
- MONUMENT TYPE: DRILL HOLE

VERTICAL POSITIONING
- ORTHOMETRIC HEIGHT DATUM: NAVD88
- GEOID: 18

HORIZONTAL POSITIONING
- REFERENCE FRAME: NAD 83 (2011)
- ELLIPSOID: GRS 80
- MAP PROJECTION: LAMBERT CONFORMAL CONIC
- COORDINATE SYSTEM: OHIO STATE PLANE - NORTH ZONE
- COMBINED SCALE FACTOR: 1.00007387
- ORIGIN OF COORDINATE SYSTEM: (0,0)

UNITS ARE IN U.S. SURVEY FEET.

STANDARDS

ALL STORM SEWER MATERIALS AND CONSTRUCTION SHALL COMPLY WITH THE NOTES AND DETAILS SHOWN ON THE PLANS AND THE REQUIREMENTS OF THE CUYAHOGA COUNTY SANITARY ENGINEER'S "UNIFORM STANDARDS FOR SEWAGE IMPROVEMENTS" AND THE GRAPHIC DETAILS OF THE "UNIFORM STANDARD SEWER DETAILS," EXCEPT THAT CATCH BASINS AND INLETS SHALL BE OF THE TYPE SHOWN ON THE PLANS.

ALL EROSION AND SEDIMENT CONTROL MATERIALS AND CONSTRUCTION SHALL COMPLY WITH THE NOTES AND DETAILS SHOWN ON THE PLANS AND THE REQUIREMENTS OF THE RAINWATER AND LAND DEVELOPMENT MANUAL.

ALL EARTHWORK, GRADING, ROADWAY, PAVEMENT, SODDING, SEEDING AND MULCHING AND MISCELLANEOUS WORK ITEMS SHALL COMPLY WITH THE NOTES AND DETAILS SHOWN ON THE PLANS AND TO THE REQUIREMENTS OF THE "OHIO DEPARTMENT OF TRANSPORTATION CONSTRUCTION AND MATERIALS SPECIFICATIONS (CMS), LATEST EDITION," AND THE "ODOT BUREAU OF LOCATION AND DESIGN STANDARD CONSTRUCTION DRAWINGS"

MATERIAL AND WORKMANSHIP SHALL ALSO CONFORM TO THE ORDINANCES OF THE CITY OF NORTH RIDGEVILLE. WHERE CONFLICTS OCCUR IN THE ABOVE, THE ENGINEER OF THE CITY OF NORTH RIDGEVILLE SHALL DETERMINE THE GOVERNING AUTHORITY. REFERENCE THROUGHOUT THESE PLANS TO "THE ENGINEER" SHALL BE THE ENGINEER OF THE CITY OF NORTH RIDGEVILLE.

THE LOCATION OF THE UNDERGROUND UTILITIES SHOWN ON THE PLANS HAVE BEEN OBTAINED BY DILIGENT FIELD CHECK AND SEARCHES OF AVAILABLE RECORDS. IT IS BELIEVED THAT THEY ARE ESSENTIALLY CORRECT, BUT EUTHENICS, INC. DOES NOT GUARANTEE THEIR ACCURACY OR COMPLETENESS AND THE CONTRACTOR IS THEREFORE URGED TO PROCEED WITH CAUTION.

LOCATIONS

LOCATIONS INDICATED ON THESE PLANS ARE APPROXIMATE. ALL LOCATIONS AND ITEMS ARE SUBJECT TO ADJUSTMENT IN THE FIELD AS APPROVED BY THE ENGINEER.

PRE-CONSTRUCTION CONFERENCES

AT LEAST FIVE DAYS PRIOR TO THE START OF ACTUAL CONSTRUCTION WORK, A PRE-CONSTRUCTION CONFERENCE SHALL BE HELD AT THE DIRECTION OF THE CITY OF NORTH RIDGEVILLE ENGINEER AND APPROPRIATE CITY OFFICIALS, AND THE OWNER'S ENGINEER. THE CONTRACTOR OR HIS AUTHORIZED SUPERINTENDENT SHALL BE PRESENT ALONG WITH ANY AND ALL PRIVATE UTILITY COMPANY REPRESENTATIVES. THIS MEETING WILL BE FOR COORDINATION AND PROCEDURE REVIEW PRIOR TO COMMENCING ANY PHYSICAL WORK.

INSPECTION

ALL WORK CONTEMPLATED, SUBJECT TO INSPECTION, I.E. SANITARY SEWERS, STORM SEWERS, PAVEMENTS, ETC., SHALL AT ALL TIMES BE SUBJECT TO THE DIRECT INSPECTION OF CITY OF NORTH RIDGEVILLE UTITITIES DEPARTMENT AND THE CITY OF NORTH RIDGEVILLE ENGINEER OR THEIR DULY AUTHORIZED REPRESENTATIVES.

CONTRACTOR SHALL NOT COMMENCE WITH ANY FORM OF CONSTRUCTION WITHOUT CONTACTING THE OFFICE OF THE CITY OF NORTH RIDGEVILLE ENGINEER TO ARRANGE FOR INSPECTION.

INSPECTION AND TESTING COSTS SHALL BE PAID BY THE CONTRACTOR AND INCLUDED IN THE BID PRICES FOR THE VARIOUS WORK ITEMS. IF ANY CHANGE IN THE WORK SCHEDULE BECOMES NECESSARY, INSPECTION COSTS, IF NO NOTIFICATION IS MADE IN REGARDS TO CANCELLATION OF WORK, WILL BE CHARGED TO THE CONTRACTOR FOR THE INSPECTION TIME INCURRED.

PRECAUTION AGAINST UTILITY DAMAGE

THE CONTRACTOR SHALL TAKE ALL NECESSARY PRECAUTIONS, AT NO EXPENSE TO THE OWNER, TO AVOID DAMAGE TO EXISTING UNDERGROUND UTILITY LINES DURING THE INSTALLATION OF THE PROPOSED IMPROVEMENTS. IT MAY BE NECESSARY TO CHANGE THE ALIGNMENT OR THE FLOW LINE ELEVATION OF PROPOSED SEWERS DUE TO VARIOUS EXISTING UTILITY LINES. THE CONTRACTOR SHALL MAKE INVESTIGATIONS TO DETERMINE THE LOCATION OF EXISTING UTILITY LINES PRIOR TO THE INSTALLATION OF THE PROPOSED IMPROVEMENTS. IF A CHANGE IN ALIGNMENT OF FLOW LINE IS REQUIRED, IT SHALL BE DONE ONLY AFTER APPROVAL BY THE ENGINEER. SUCH INVESTIGATIONS SHALL BE AT NO ADDITIONAL COST TO THE OWNER.

THE CONTRACTOR SHALL BE RESPONSIBLE FOR ALL DAMAGES TO THE EXISTING WATER AND SEWERAGE SYSTEM RESULTING FROM NON-CONFORMANCE WITH THE APPLICABLE STANDARDS OR THROUGH GENERAL NEGLIGENCE.

DUST CONTROL

THE CONTRACTOR SHALL SUPPLY ALL LABOR, MATERIAL AND EQUIPMENT NECESSARY SUCH AS CALCIUM CHLORIDE, WATER, OR A MOTORIZED DUST-FREE STREET SWEEPING DEVICE, AS DIRECTED BY THE ENGINEER, TO MAINTAIN ALL ROADWAYS BEING USED FOR ACCESS TO THE CONSTRUCTION SITE. PAYMENT FOR ALL DUST CONTROL MEASURES SHALL BE INCLUDED IN THE UNIT PRICE BID FOR OTHER VARIOUS ITEMS.

GENERAL

1. ANY DEFECTS IN THE CONSTRUCTION, INCLUDING MATERIALS OR WORKMANSHIP, SHALL BE REPLACED OR CORRECTED BY REMOVAL AND REPLACEMENT OR OTHER APPROVED METHOD PRIOR TO ACCEPTANCE BY THE CITY OF NORTH RIDGEVILLE.
2. THE ENTIRE PERIMETER OF THE SITE FROM THE PROPERTY LINE TO 100 FEET OUTSIDE OF THE PROPERTY LINE SHALL BE "AUDIO VISUAL" INSPECTED BEFORE ANY CONSTRUCTION WORK COMMENCES. A COPY OF THE VIDEO TAPE SHALL BE PROVIDED TO THE OWNER AND THE CITY ENGINEER.
3. PREMIUM BACKFILL SHALL BE CRUSHED LIMESTONE ONLY, OF THE SIZE AND TYPE SPECIFIED.
4. NO PARKING OF CONTRACTORS OR CONTRACTOR EMPLOYEES VEHICLES ON ANY CITY STREETS SHALL BE PERMITTED. CONTRACTORS AND CONTRACTOR EMPLOYEES ARE REQUIRED TO PARK IN THE SITE PARKING LOT.
5. THE CONTRACTOR IS RESPONSIBLE FOR PAYING FOR AND OBTAINING ALL NECESSARY PERMITS FROM THE CITY OF NORTH RIDGEVILLE.
6. DOWNSPOUT HEADER PIPES SHALL BE S.D.R. 35 P.V.C. WITH "O" RING JOINTS INSTALLED AT A MINIMUM GRADE OF 1.00%.
7. ROOF DRAINS, FOUNDATION DRAINS AND OTHER CLEAN WATER CONNECTIONS TO THE SANITARY SEWER SYSTEM ARE PROHIBITED.
8. BACKFILL MATERIAL SHALL BE OF SOUND EARTH OR GRAVEL, FREE OF STONES OR LUMPS. UNDER SIDEWALKS, DRIVEWAYS OR PAVEMENTS USE PREMIUM BACKFILL COMPACTED IN 8" LIFTS.
9. ALL STUMPS AND BRUSH SHALL BE GROUND OR CHIPPED AND REMOVED FROM THE SITE. ALL SURPLUS EXCAVATION AND TOPSOIL SHALL BE REMOVED FROM THE SITE AND DISPOSED OF PROPERLY. ALL EXISTING STREETS TO BE KEPT CLEAN OF SOIL, DIRT AND DEBRIS.
10. SLAG SHALL NOT BE PERMITTED ON THE PROJECT.

ODOT ITEM 304 - AGGREGATE BASE

MATERIALS FURNISHED FOR THIS ITEM SHALL BE LIMITED TO CRUSHED CARBONATE STONE. GRADATION SHALL BE IN CONFORMANCE WITH 304.02 EXCEPT THAT THE MAXIMUM TOTAL PERCENT PASSING THE NO. 200 SIEVE SHALL BE 10 PERCENT AS OPPOSED TO THE 15 PERCENT SHOWN IN ODOT CMS.

1. ALL CLEARED AND DISTURBED AREAS MUST BE ROUGH GRADED TO ESTABLISH POSITIVE DRAINAGE BEFORE BEING SEEDED WITH TEMPORARY SEEDING.
2. EMBANKMENT COMPACTION OUTSIDE OF UTILITY EASEMENTS SHALL BE COMPACTED TO 95% OF MAXIMUM DENSITY.
3. THE CONTRACTOR SHALL MAINTAIN A CURRENT SET OF CONSTRUCTION DRAWINGS PREPARED BY THE DESIGN ENGINEER AND RECORD THE EXACT LOCATION OF ALL PERTINENT ITEMS.
4. ALL 6" AND 8" STORM SEWER CONDUIT SHALL BE S.D.R. 35 P.V.C. PIPE (ASTM D-3034) WITH "O" RING JOINTS (ASTM D-3212). CONDUIT MATERIAL SPECIFICATIONS FOR SEWERS LARGER THAN 8" SHALL CONFORM TO ODOT ITEM 611. TYPE B CONDUIT SHALL BE UTILIZED FOR STORM SEWERS UNDER PAVMENT AND TYPE C CONDUIT CAN BE USED FOR STORM SEWERS NOT UNDER PAVEMENT. STORM SEWER CONDUIT SHALL HAVE PREMIUM JOINTS CONFORMING TO ASTM D-3212 FOR PLASTIC PIPES, ASTM D-3212 ELASTOMERIC GASKET PUSH-ON TYPE JOINT FOR PVC COMPOSITE WALL PIPES, ASTM C-425 FOR CLAY PIPES, ASTM C-443 FOR CONCRETE PIPES, AND ASTM F-477 ASTM D-3212 "WATER TIGHT JOINT" FOR HDPE PIPIES.ALUMINIZED STEEL PIPES AND CORRUGATED METAL PIPES ARE NOT BE USED ON THIS PROJECT).
5. UNDERGROUND UTILITIES ARE SHOWN BASED UPON ACTUAL LOCATIONS OF ABOVE GROUND STRUCTURES AND RECORDS OF OTHERS AS TO UNDERGROUND LOCATIONS, SIZES AND CONFIGURATION. THE CONTRACTOR SHALL FIELD VERIFY ALL LOCATIONS AND DEPTHS PRIOR TO COMMENCING OF WORK.
6. ALL EXISTING ROOF DRAIN LINES ENCOUNTERED SHALL BE TIED INTO THE PROPOSED STORM SEWER SYSTEM.
7. ANY EXISTING STORM SEWER PIPES ENCOUNTERED DURING CONSTRUCTION SHALL BE FIELD INVESTIGATED AND CONNECTED TO THE PROPOSED STORM SEWER SYSTEM, ABANDONED, OR REMOVED AS DIRECTED BY THE OWNER.
8. ANY WORK ON ADJACENT PARCELS CAN COMMENCE ONLY AFTER A WORK AGREEMENT HAS BEEN OBTAINED BY THE OWNER.
9. ALL WORK SHOWN ON THESE IMPROVEMENT PLANS IS TO BE COMPLETED IN STAGED SEQUENCE. THE OWNER SHALL DETERMINE THE LIMITS OF EACH STAGE PRIOR TO COMMENCEMENT.

CALCULATED VMB
CHECKED ERP

GENERAL NOTES

NORTH RIDGEVILLE

EUTHENICS
8235 MOHAWK DRIVE., STRONGSVILLE, OHIO 44136

F:\Jobs\1254-TJB Site Expansion\Design\Sheets\1254_GN001.dwg 14-May-24 9:51 AM

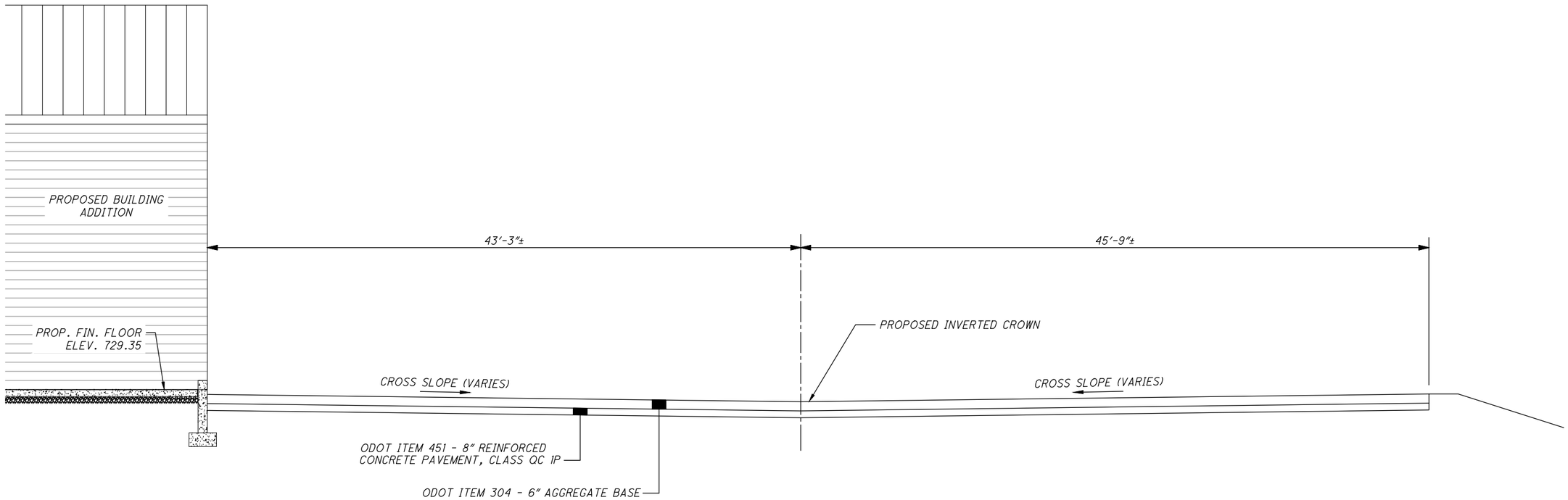

TYPICAL SECTION AT INVERTED CROWN
NO SCALE

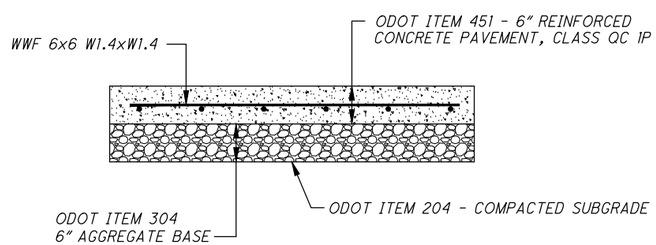

TYPICAL PAVEMENT SECTION (WESTERLY & NORTHERLY)
NO SCALE

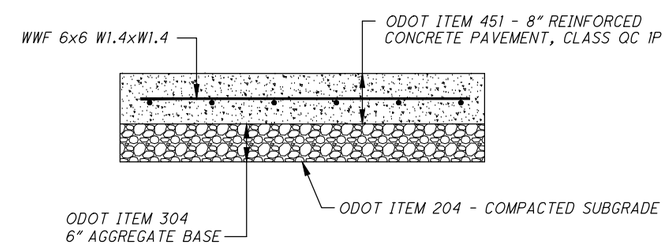

TYPICAL PAVEMENT SECTION (EASTERLY)
NO SCALE

CALCULATED VMB
CHECKED ERP

TYPICAL SECTION

NORTH RIDGEVILLE

EUTHENICS
8235 MOHAWK DRIVE., STRONGSVILLE, OHIO 44136

3
13

F:\Jobs\1254-TJB Site Expansion\Design\Sheets\1254_GY01.DWG 14-May-24 9:51 AM

N

HORIZONTAL SCALE IN FEET
0 10 20 40

CALCULATED VMB
CHECKED ERP

EXISTING CONDITIONS PLAN

TJB, INC.

NORTH RIDGEVILLE

EUTHENICS
8235 MOHAWK DRIVE., STRONGSVILLE, OHIO 44136

4
13

F:\Jobs\1254-TJB Site Expansion\Design\Sheets\1254_EX001.dwg 14-May-24 9:51 AM

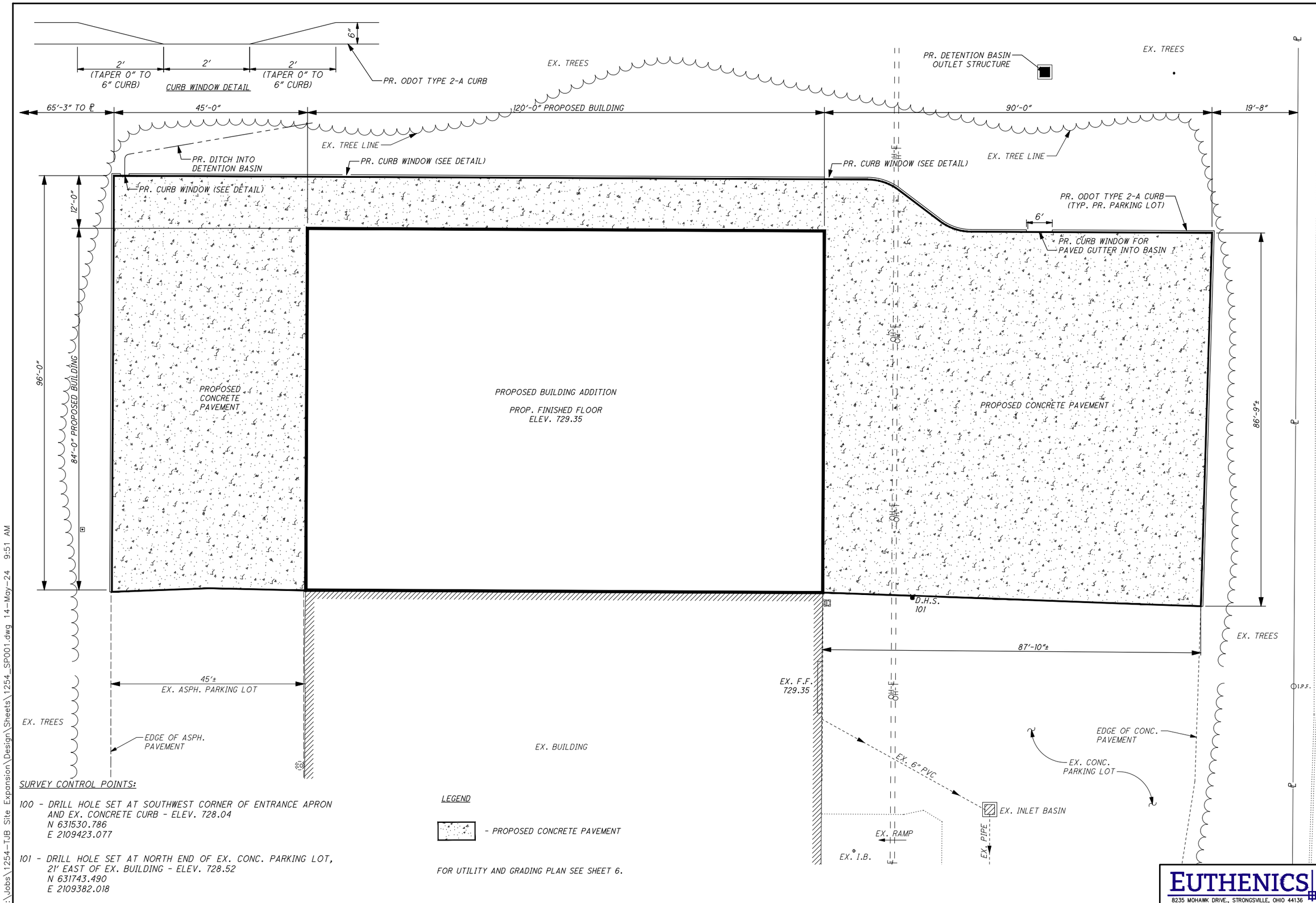

SURVEY CONTROL POINTS:

100 - DRILL HOLE SET AT SOUTHWEST CORNER OF ENTRANCE APRON AND EX. CONCRETE CURB - ELEV. 728.04
N 631530.786
E 2109423.077

101 - DRILL HOLE SET AT NORTH END OF EX. CONC. PARKING LOT, 21' EAST OF EX. BUILDING - ELEV. 728.52
N 631743.490
E 2109382.018

PROPOSED SITE PLAN
TJB, INC.
NORTH RIDGEVILLE

EUTHENICS
8235 MOHAWK DRIVE., STRONGSVILLE, OHIO 44136

5/13

F:\Jobs\1254-TJB Site Expansion\Design\Sheets\1254_SP001.dwg 14-May-24 9:51 AM

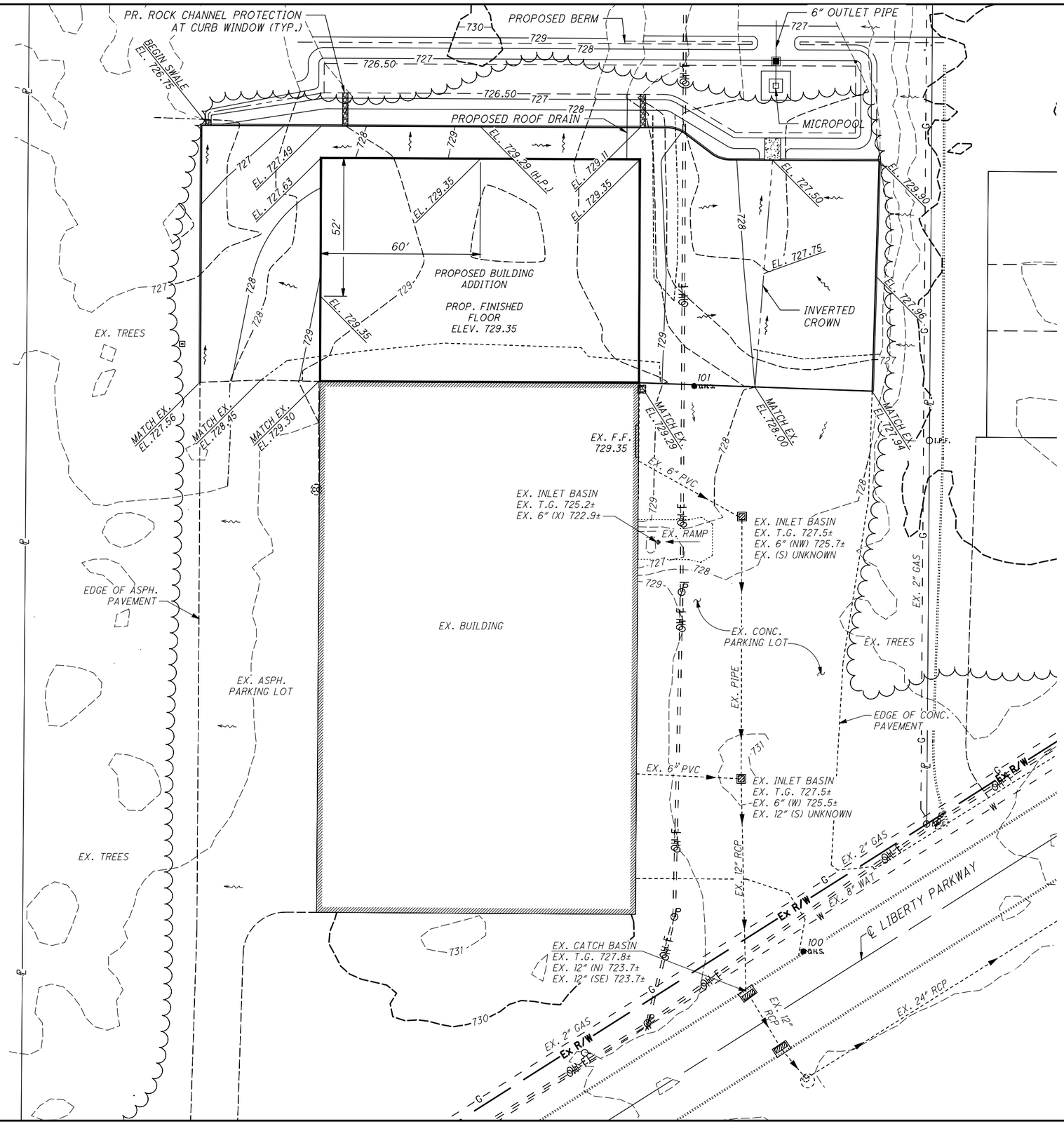

SURVEY CONTROL POINTS:

100 - DRILL HOLE SET AT SOUTHWEST CORNER OF ENTRANCE APRON AND EX. CONCRETE CURB - ELEV. 728.04
N 631530.786
E 2109423.077

101 - DRILL HOLE SET AT NORTH END OF EX. CONC. PARKING LOT, 21' EAST OF EX. BUILDING - ELEV. 728.52
N 631743.490
E 2109382.018

UNDERGROUND UTILITIES NOTE:

ALL UTILITIES SHOWN ON THESE PLANS HAVE BEEN LOCATED FROM SURVEY OR RECORD DRAWINGS. IT IS THE RESPONSIBILITY OF THE CONTRACTOR TO LOCATE ALL EXISTING UTILITIES AS TO LINE AND GRADE BEFORE CONSTRUCTION BEGINS. ANY UTILITIES ENCOUNTERED IN THE FIELD THAT ARE NOT AS SHOWN SHOULD BE BROUGHT TO THE ATTENTION OF THE ENGINEER IMMEDIATELY.

SITE IMPERVIOUS DATA

EXISTING - 50,500 S.F. (1.159 AC.)

PROPOSED - 74,197 S.F. (1.703 AC.)

ADDITIONAL (INCREASE) - 23,697 S.F. (0.544 AC.)

NOTES:

1. CONTRACTOR SHALL BLEND NEW EARTHWORK WITH EXISTING CONTOURS AND MAINTAIN EXISTING DRAINAGE PATHS.
2. TEMPORARY SEED/STABILIZED/WINTERIZE ANY DISTURBED AREAS IN ACCORDANCE WITH THE SPECIFICATIONS CONTAINED IN THESE PLANS OR AS DIRECTED BY THE CITY OF NORTH RIDGEVILLE.

CONSTRUCTION SEQUENCE

1. INSTALL SILT FENCE AND INLET PROTECTION.
2. CLEAR AND GRUB AREA OF BUILDING EXPANSION, PROPOSED PARKING LOT AND PERMEABLE PAVER AREA.
3. INSTALL DETENTION BASIN.
4. CONSTRUCTION OF BUILDING EXPANSION.
5. INSTALL PROPOSED PARKING LOT.
6. SEED AND MULCH ALL DISTURBED AREAS.
7. REMOVE INLET PROTECTION AND SILT FENCE AFTER GRASS IS ESTABLISHED.

4:1 4:1

PROPOSED SWALE SECTION

TICKET NO.: A401800485

UNDERGROUND UTILITIES
Contact Two Working Days Before You Dig
OHIO811.org Before You Dig
OHIO811, 8-1-1, or 1-800-362-2764
(Non-members must be called directly)

EUTHENICS
8235 MOHAWK DRIVE., STRONGSVILLE, OHIO 44136

N
HORIZONTAL SCALE IN FEET 0 10 20 40

CALCULATED VMB
CHECKED

PROPOSED UTILITY & GRADING PLAN
TJB, INC.

NORTH RIDGEVILLE

6
13

F:\Jobs\1254-TJB Site Expansion\Design\Sheets\1254_UP001.dwg 14-May-24 9:51 AM

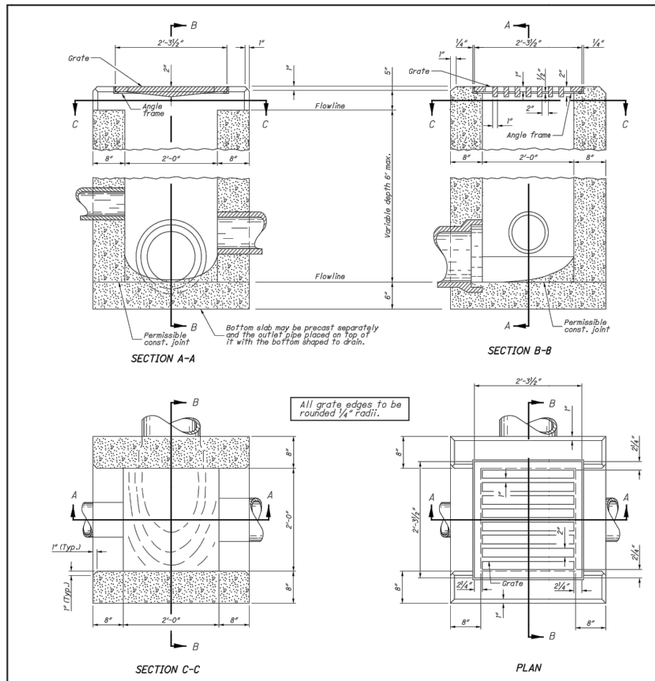

CATCH BASIN No. 2-2A

NOTES

GENERAL: Catch Basins 2-2A and 2-2B are not intended for use in roadway applications. Catch Basin 2-2C is intended for parking lot use only.

CATCH BASINS 2-2A, 2-2B & 2-2C: This sheet depicts Catch Basin 2-2A. See Sheet 1 of 2 for Catch Basin 2-2B & 2-2C.

GRATE AND FRAME: Furnish a design essentially the same and equally as strong as the one shown (see Construction Information Table), or meet The requirements of CMS 711.14. Provide grate openings and dimensions as shown here unless otherwise shown in the plans.

Cast the following text into the top of the grate:

"DUMP NO WASTE" and **"DRAINS TO WATERWAY"**

Print text in bold, capital letters at least ½" high. "WATERWAY" may be substituted with "STREAM", "RIVER", "LAKE", etc. Actual placement and logo may vary per manufacturer.

WALLS: Construct brick or cast-in-place walls with a nominal 8" thickness. Provide precast walls at least 8" thick with sufficient reinforcing to permit shipping and handling without damage. Do not use brick above the flow line of the side opening for Type 2-2A.

CONCRETE: Use 4000 psi compressive strength for cast-in-place concrete. Meet The requirements of CMS 706.13 for all precast concrete and mark with the catch basin number.

PRECAST BASE: If a precast base is used, set it deep enough so that the top can be placed on the base to provide the grate elevation specified in The plans. Do not use brick layers to adjust The Top elevation.

LOCATION AND ELEVATION: When given on the plans, location and elevation are at the top center of the grate.

MINIMUM DEPTH: The minimum depth of CB No. 2-2A is the outside diameter (O.D.) of the outlet pipe plus 1".

OPENINGS: Ensure pipe openings are the O.D. of the pipe being supplied plus 2" when fabricated or field cut. Fill any voids per CMS 611.

2-2A SIDE INLETS: Provide inlets on both sides of the No. 2-2A catch basin in sags and on upstream side only where the ditch has a continuous down grade past the catch basin. Do not use CB 2-2A within the Clear Zone. The flow line should be 4" to 6" below normal ditch returning to normal 10' to 15' each side of the inlet.

PAYMENT: All materials and labor, including excavation and backfilling, are paid for under **Item 611 - Catch Basin, No. 2-2A.**

CONSTRUCTION INFORMATION
Minimum weight of grate, 120 lbs.
Minimum weight of Frame, 40 lbs.

CATCH BASIN	OUTLET PIPE SIZE
2-2A, 2-2B, 2-2C	12" to 18"

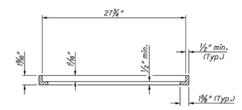

SECTION THRU ANGLE FRAME FOR STANDARD No. 2-2A CATCH BASIN

STATE OF OHIO DEPARTMENT OF TRANSPORTATION HYDRAULIC ENGINEER Jeffery E. Syar

REVISIONS 1-18-13, 1-15-16, 7-20-18, 7-19-19, 7-16-21, 7-15-22, 1-20-23

ROADWAY HYDRAULIC ENGINEER M. Cozzoli

OFFICE OF HYDRAULICS ENGINEERING

STANDARD HYDRAULIC CONSTRUCTION DRAWING

CATCH BASIN No's 2-2A, 2-2B, 2-2C

DRAWING CB-2-2A, 2-2B, 2-2C

1/2

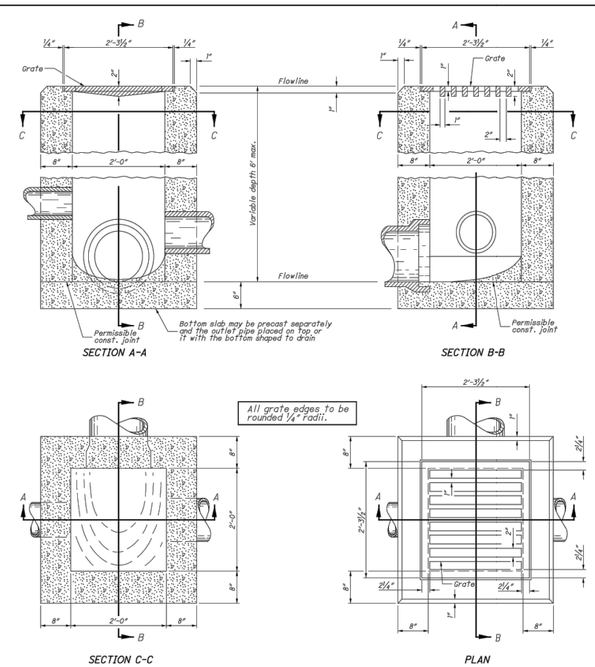

CATCH BASIN No. 2-2B

NOTES

CATCH BASINS 2-2A, 2-2B & 2-2C: This sheet depicts Catch Basin 2-2B & 2-2C. See Sheet 1 of 2 for Catch Basin 2-2A.

CB-2-2B GRATE: Furnish a design essentially the same and equally as strong as the one shown (see Construction Information Table), or meet The requirements of CMS 711.14. Provide grate openings and dimensions as shown here unless otherwise shown in the plans.

If necessary, bicycle safe grates will be specified in the plans. Furnish Neenah No. R-4859-S or EJ No. 5110M3 (10051043) grates or approved equals.

Place grate elevation 4" to 6" below normal ditch and return to normal 10' to 15' each side of inlet.

CB-2-2C FRAME & GRATE: Where the catch basin is specified for use in a parking lot, Furnish Neenah No. R-1878-A50 or EJ No. V-5622 (45622010) frame and V-5622 (45622030) grate or approved equals. If necessary, bicycle safe grates will be specified in the plans. Furnish Neenah No. R-3405 grate or EJ No. 5250M (00025030) grate or approved equals.

CB-2-2C APRON: On cast-in-place and precast units, provide a level surface on The catch basin 4" below the plan grate elevation for setting the frame and grate assembly, install a 4000 psi concrete apron to encase and secure the frame with a minimum width not less than the thickness of the catch basin walls. Slope the apron To provide a local depression. Include a 1" expansion joint where the apron abuts PCC pavement. The cost is included in the catch basin bid price.

GRATE TEXT: Cast the following text into the top of the grate:

"DRAINS TO WATERWAY" and **"DUMP NO WASTE"**

Print text in bold, capital letters at least 1/2" high. "WATERWAY" may be substituted with "STREAM", "RIVER", "LAKE", etc. Actual placement and logo may vary per manufacturer.

WALLS: Construct cast-in-place walls with a nominal 8" thickness. Provide precast walls at least 6" thick with sufficient reinforcing to permit shipping and handling without damage.

CONCRETE: Use 4000 psi compressive strength for cast-in-place concrete. Meet The requirements of CMS 706.13 for all precast concrete and mark with the catch basin number.

PRECAST BASE: If a precast base is used, set it deep enough so that the top can be placed on the base to provide the grate elevation specified in The plans. Do not use brick layers to adjust The Top elevation.

LOCATION AND ELEVATION: When given on the plans, location and elevation are at the top center of the grate.

MINIMUM DEPTH: The minimum depth of CB No. 2-2B is the outside diameter (O.D.) of The outlet pipe plus 4". The minimum depth of CB No. 2-2C is the outside diameter (O.D.) of the outlet pipe plus 8".

OPENINGS: Ensure pipe openings are the O.D. of the pipe being supplied plus 2" when fabricated or field cut. Fill any voids per CMMS 611.

PAYMENT: All materials and labor, including excavation and backfilling, are paid for under **Item 611 - Catch Basin, No. 2-2B or 2C.**

CONSTRUCTION INFORMATION
Minimum weight of grate, 120 lbs.

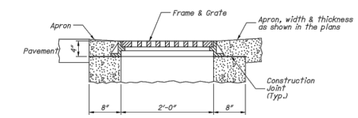

CATCH BASIN No. 2-2C

STATE OF OHIO DEPARTMENT OF TRANSPORTATION HYDRAULIC ENGINEER Jeffery E. Syar

REVISIONS 1-18-13, 1-15-16, 7-20-18, 7-19-19, 7-16-21, 7-15-22, 1-20-23

ROADWAY HYDRAULIC ENGINEER M. Cozzoli

OFFICE OF HYDRAULICS ENGINEERING

STANDARD HYDRAULIC CONSTRUCTION DRAWING

CATCH BASIN No's 2-2A, 2-2B, 2-2C

DRAWING CB-2-2A, 2-2B, 2-2C

2/2

CALCULATED VMB CHECKED ERP

MISCELLANEOUS DETAILS

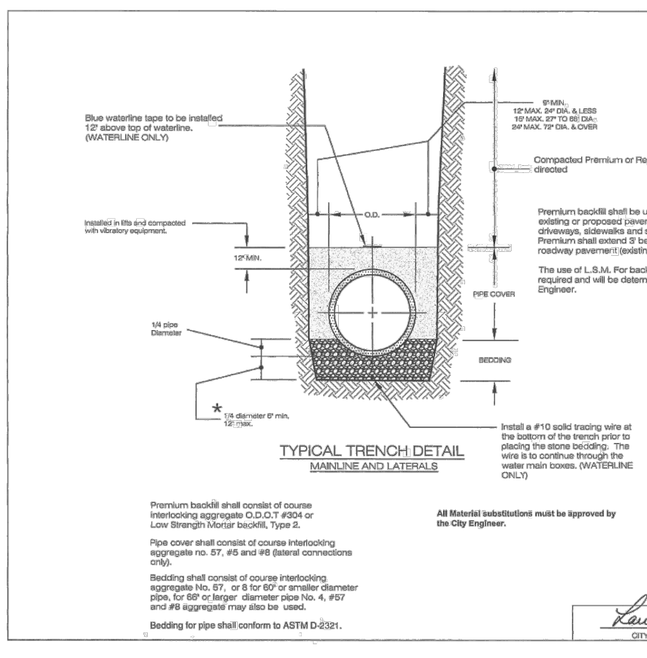

TYPICAL TRENCH DETAIL
MAINLINE AND LATERALS

Premium backfill shall consist of course interlocking aggregate O.D.O.T #304 or Low Strength Mortar backfill, Type 2.

Pipe cover shall consist of course interlocking aggregate no. 57, #5 and #8 (lateral connections only).

Bedding shall consist of course interlocking aggregate No. 57, or 8 for 60" or smaller diameter pipe, for 66" or larger diameter pipe No. 4, #57 and #8 aggregate may also be used.

Bedding for pipe shall conform to ASTM D-2321.

All Material substitutions must be approved by the City Engineer.

Low Strength Mortar Backfill
When the use of flowable fill is directed by the Engineer within the limits of the pavement, the material used shall be Low Strength Mortar Backfill TYPE 2 per current O.D.O.T. Construction and Material Specifications, except as modified herein.

The use of Foundry Sand or Slag is strictly prohibited.

Notes:

★ Lateral connections to have a minimum bedding depth of 6" coarse aggregate.

A clay dam shall be installed as directed by the City of North Ridgeville inspector for all sanitary and storm connections.

REV. No.	DATE	BY	DESCRIPTION

CITY OF NORTH RIDGEVILLE, OHIO
DEPARTMENT OF ENGINEERING

TRENCH DETAIL

SCALE: NOT TO SCALE | DATE: 10/01/08 | DRAWN BY: JAB/TEB | MIS-1

CITY OF NORTH RIDGEVILLE, ENGINEER

Rev. 8/20/2014

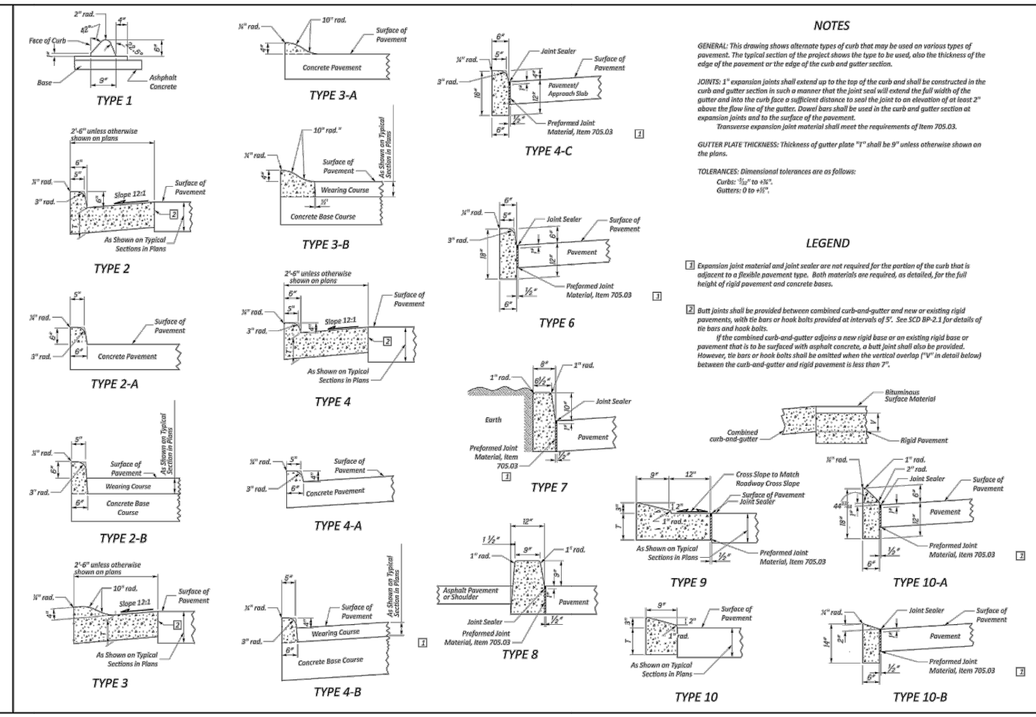

NOTES

GENERAL: This drawing shows alternate types of curb that may be used on various types of pavement. The typical section of the project shows the type to be used, also the thickness of the edge of the pavement or the edge of the curb and gutter section.

JOINTS: 1" expansion joints shall extend up to the top of the curb and shall be constructed in the curb and gutter section in such a manner that the joint seal will extend the full width of the gutter and into the curb face a sufficient distance to seal the joint to an elevation of at least 2" above the flow line of the gutter. Dowel bars shall be used in the curb and gutter section at expansion joints and to the surface of the pavement.
Transverse expansion joint material shall meet the requirements of Item 705.03.

GUTTER PLATE THICKNESS: Thickness of gutter plate "t" shall be 9" unless otherwise shown on the plans.

TOLERANCES: Dimensional tolerances are as follows:
Curbs: ⅛" to +¼".
Gutters: 0 to +¼".

LEGEND

[1] Expansion joint material and joint sealer are not required for the portion of the curb that is adjacent to a flexible pavement type. Both materials are required, as detailed, for the full height of rigid pavement and concrete bases.

[2] Butt joints shall be provided between combined curb-and-gutter and new or existing rigid pavements, with tie bars or hook bolts provided at intervals of 5'. See SCD BP-2.1 for details of tie bars and hook bolts.
If the combined curb-and-gutter adjoins a new rigid base or an existing rigid base or pavement that is to be surfaced with asphalt concrete, a butt joint shall also be provided. However, tie bars or hook bolts shall be omitted when the vertical overlap ("V" in detail below) between the curb-and-gutter and rigid pavement is less than 7".

OFFICE OF ROADWAY ENGINEERING

REVISIONS 3-21-2022, 7-15-2022

DESIGN ENGINEER D.Fisher

DIRECTOR, OFFICE OF ROADWAY ENGINEERING Adam Koenig

STANDARD ROADWAY CONSTRUCTION DRAWING
CONCRETE CURBS AND
COMBINED CURB AND GUTTER

DESIGN AGENCY

SCD NUMBER BP-5.1

SHEET P-1 TOTAL 1

BP-5.1

NORTH RIDGEVILLE

EUTHENICS
8235 MOHAWK DRIVE., STRONGSVILLE, OHIO 44136

F:\Jobs\1254-TJB Site Expansion\Design\Sheets\1254_MD01.DWG 14-May-24 9:51 AM

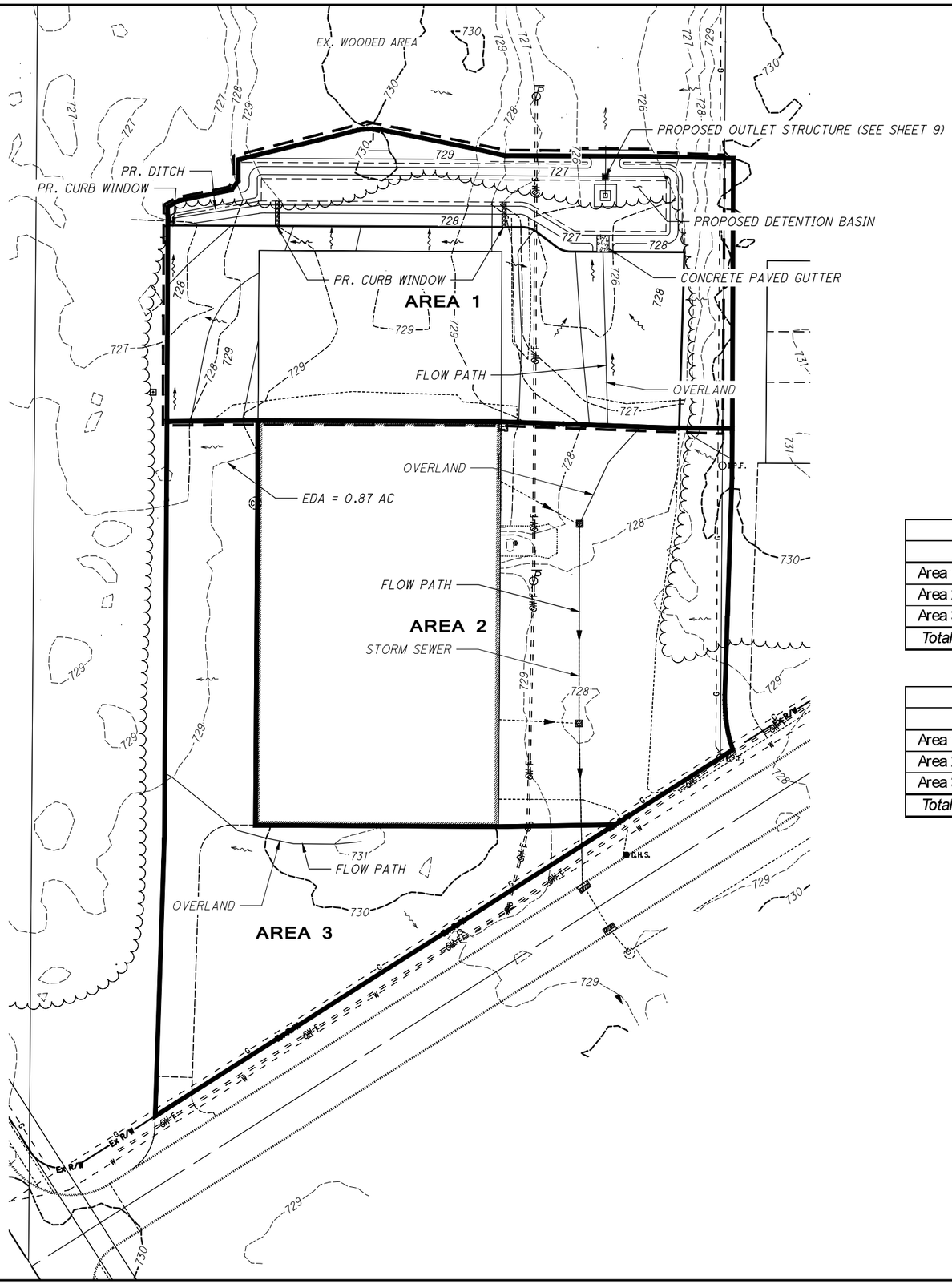

PRE-CONSTRUCTION CONDITIONS

	DRAINAGE AREA (AC)	AVERAGE SLOPE	CURVE NUMBER
AREA 1	0.852	2.43%	81
AREA 2	1.040	2.47%	96
AREA 3	0.571	1.97%	88

POST-CONSTRUCTION CONDITIONS

	DRAINAGE AREA (AC)	AVERAGE SLOPE	CURVE NUMBER
AREA 1	0.852	1.11%	91
AREA 2	1.040	2.47%	96
AREA 3	0.571	1.97%	88

Pre-Construction Runoff Rate (cfs)

	1-Year	2-Year	5-Year	10-Year	25-Year	50-Year	100-Year
Area 1	0.75	1.17	1.78	2.30	3.16	3.98	4.92
Area 2	2.35	2.98	3.82	4.49	5.56	6.53	7.65
Area 3	0.84	1.17	1.63	2.00	2.61	3.17	3.80
Total	*3.94*	*5.32*	*7.23*	*8.79*	*11.33*	*13.68*	*16.37*

Post-Construction Runoff Rate (cfs)

	1-Year	2-Year	5-Year	10-Year	25-Year	50-Year	100-Year
Area 1	0.39	0.52	0.65	0.73	2.16	3.50	4.85
Area 2	2.35	2.98	3.82	4.49	5.56	6.53	7.65
Area 3	0.84	1.17	1.63	2.00	2.61	3.17	3.80
Total	*3.58*	*4.67*	*6.10*	*7.22*	*10.33*	*13.20*	*16.30*

N

HORIZONTAL SCALE IN FEET 0 10 20 40

CALCULATED COM

CHECKED

STORMWATER MANAGEMENT PLAN

TJB, INC.

NORTH RIDGEVILLE

EUTHENICS

8235 MOHAWK DRIVE., STRONGSVILLE, OHIO 44136

8 / 13

F:\Jobs\1254-TJB Site Expansion\Design\Sheets\1254_SWM001.dwg 14-May-24 9:52 AM

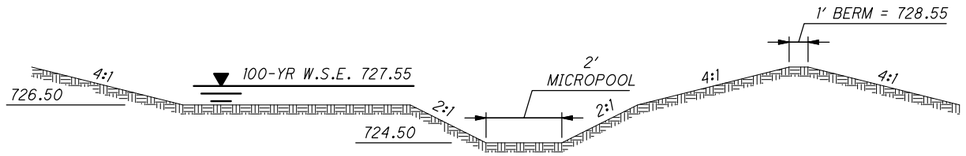

DETENTION BASIN SECTION

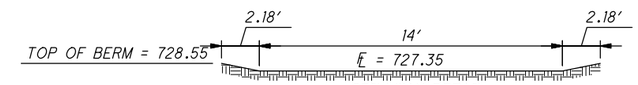

SPILLWAY DETAIL

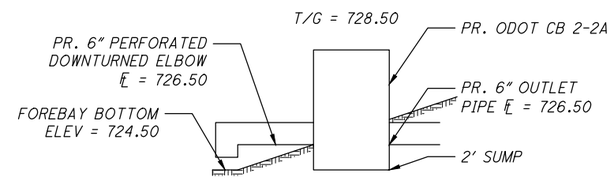

OUTLET STRUCTURE DETAIL
(NOT TO SCALE)

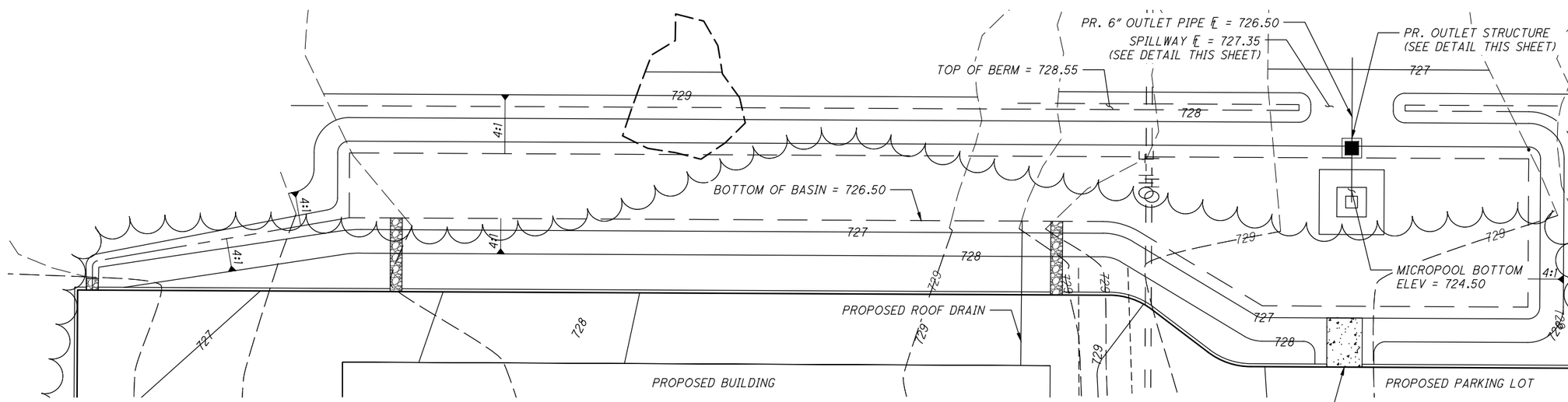

DETENTION BASIN DETAIL

10 0 10 20
SCALE IN FEET

N

N

HORIZONTAL SCALE IN FEET
0 5 10 20

CALCULATED COM
CHECKED

STORMWATER MANAGEMENT PLAN
TJB, INC.

NORTH RIDGEVILLE

EUTHENICS
8235 MOHAWK DRIVE., STRONGSVILLE, OHIO 44136

9
13

F:\Jobs\1254-TJB Site Expansion\Design\Sheets\1254_SWM001.dwg 14-May-24 9:52 AM

EROSION AND SEDIMENT CONTROL

GENERAL

THE CONTRACTOR SHALL MEET THE SOIL EROSION AND SEDIMENT CONTROL REQUIREMENTS OF THE OHIO ENVIRONMENTAL PROTECTION AGENCY AND CITY OF NORTH RIDGEVILLE. IN CASES WHERE CONFLICTS EXIST BETWEEN STANDARDS, THE STRICTER REQUIREMENT SHALL APPLY.

PAYMENT SHALL BE MADE IN ACCORDANCE WITH THE CONTRACT DOCUMENTS FOR SOIL EROSION AND SEDIMENT CONTROL AND SHALL BE CONSIDERED FULL COMPENSATION FOR ALL LABOR, MATERIALS, INSTALLATION, EQUIPMENT, ETC., NECESSARY TO COMPLETE SPECIFIED ITEMS AS SPECIFIED AND REQUIRED.

THE CONTRACTOR SHALL MAINTAIN ALL ITEMS INSTALLED TO THE SATISFACTION OF THE ENGINEER. WHERE ITEMS ARE ORDERED BY THE ENGINEER TO BE REPLACED, THE CONTRACTOR SHALL REMOVE AND DISPOSE OF SUCH ITEMS AND REPLACE THEM AS DIRECTED BY THE ENGINEER AT NO ADDITIONAL COST.

ALL BRUSH SHALL BE GROUND OR CHIPPED AND REMOVED FROM THE SITE. TREES SHALL BE REMOVED AS NOTED ON THE PLANS OR DIRECTED BY THE ENGINEER. ALL SURPLUS EXCAVATION AND TOPSOIL SHALL BE STORED IN AREAS TO BE DESIGNATED BY THE CITY OF NORTH RIDGEVILLE. ALL EXISTING STREETS TO BE KEPT CLEAN OF SOIL.

THE CONTRACTOR SHALL BE RESPONSIBLE, DURING THE ENTIRE PROJECT, FOR CONTROLLING WATER POLLUTION, SOIL EROSION AND SILTATION IN ACCORDANCE WITH ODOT'S SUPPLEMENT SPECIFICATION 832 (LATEST VERSION) AND IN ACCORDANCE WITH THE EROSION CONTROL NOTES AND DETAILS PROVIDED IN THE PLANS. THE ENGINEER HAS THE AUTHORITY TO ORDER ADDITIONAL CONTROL MEASURES SUCH AS BENCHES, DIKES, DAMS, SEDIMENT BASINS, PLASTIC SHEETS, SILT FENCES, MATS, COARSE AGGREGATE, MULCHES, SEEDING, SLOPE DRAINS, AND OTHER DEVICES AND METHODS WHICH IN HIS OPINION ARE NECESSARY. THE MATERIALS, EQUIPMENT AND LABOR NECESSARY TO PERFORM THIS WORK IS CONSIDERED INCIDENTAL TO THE PROJECT, PAYMENT SHALL BE INCLUDED IN OTHER ITEMS OF WORK.

ODNR RAINWATER AND LAND DEVELOPMENT MANUAL

THE FOLLOWING SPECIFICATIONS ARE FROM THE OHIO RAINWATER AND LAND DEVELOPMENT MANUAL AND ARE FOR SPECIFIC ITEMS REQUIRED FOR WATER MANAGEMENT, SOIL EROSION CONTROL AND SEDIMENT CONTROL. WHERE REFERENCE IS MADE TO OHIO DEPARTMENT OF TRANSPORTATION SPECIFICATIONS IT SHALL BE UNDERSTOOD AS THAT SPECIFICATION AND ANY REFERENCED SPECIFICATION IN THE 2023 EDITION OF THE OHIO DEPARTMENT OF TRANSPORTATION CONSTRUCTION AND MATERIALS SPECIFICATIONS.

SPECIFICATIONS FOR PROTECTION DURING UTILITY INSTALLATION

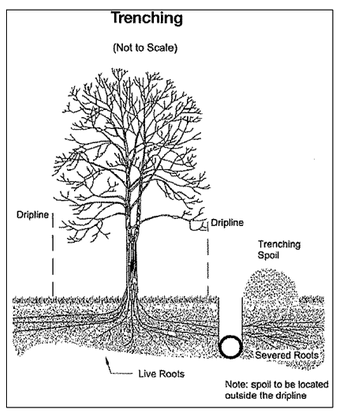

1. ROOTS TWO INCHES OR LARGER THAT ARE SEVERED BY TRENCHING SHOULD BE SAWN OFF NEATLY IN ORDER TO ENCOURAGE NEW GROWTH AND DISCOURAGE DECAY.
2. SOIL EXCAVATED DURING TRENCHING SHALL BE PILED ON THE SIDE AWAY FROM THE TREE.
3. ROOTS SHALL BE KEPT MOIST WHILE TRENCHES ARE OPEN AND REFILLED IMMEDIATELY AFTER UTILITIES ARE INSTALLED OR REPAIRED.

SPECIFICATIONS FOR TOPSOILING

SALVAGING AND STOCKPILING

1. DETERMINE THE DEPTH AND SUITABILITY OF TOPSOIL AT THE SITE. (FOR HELP, CONTACT YOUR LOCAL SWGD OFFICE TO OBTAIN A COUNTY SOIL SURVEY REPORT).
2. PRIOR TO STRIPPING TOPSOIL, INSTALL APPROPRIATE DOWNSLOPE EROSION AND SEDIMENTATION CONTROLS SUCH AS SEDIMENT TRAPS AND BASINS.
3. REMOVE THE SOIL MATERIAL NO DEEPER THAN WHAT THE COUNTY SOIL SURVEY DESCRIBES AS "SURFACE SOIL" (IE. A OR AP HORIZON).
4. CONSTRUCT STOCKPILES IN ACCESSIBLE LOCATIONS THAT DO NOT INTERFERE WITH NATURAL DRAINAGE. INSTALL APPROPRIATE SEDIMENT CONTROLS TO TRAP SEDIMENT SUCH AS SILT FENCE IMMEDIATELY ADJACENT TO THE STOCKPILE OR SEDIMENT TRAPS OR BASINS DOWNSTREAM OF THE STOCKPILE. STOCKPILE SIDE SLOPES SHALL NOT EXCEED A RATIO OF 2:1.
5. IF TOPSOIL IS STORED FOR MORE THAN 21 DAYS, IT SHOULD BE TEMPORARY SEEDED, OR COVERED WITH A TARP.

SPREADING THE TOPSOIL

1. PRIOR TO APPLYING TOPSOIL, THE TOPSOIL SHOULD BE PULVERIZED.
2. TO ENSURE BONDING, GRADE THE SUBSOIL AND ROUGHEN THE TOP 3-4 IN. BY DISKING.
3. DO NOT APPLY WHEN SITE IS WET, MUDDY, OR FROZEN, BECAUSE IT MAKES SPREADING DIFFICULT, CAUSES COMPACTION PROBLEMS, AND INHIBITS BONDING WITH SUBSOIL.
4. APPLY TOPSOIL EVENLY TO A DEPTH OF AT LEAST 4 INCHES AND COMPACT SLIGHTLY TO IMPROVE CONTACT WITH SUBSOIL.
5. AFTER SPREADING, GRADE AND STABILIZE WITH SEEDING OR APPROPRIATE VEGETATION.

SPECIFICATIONS FOR MULCHING

1. MULCH AND OTHER APPROPRIATE VEGETATIVE PRACTICES SHALL BE APPLIED TO DISTURBED AREAS WITHIN 7 DAYS OF GRADING IF THE AREA IS TO REMAIN DORMANT (UNDISTURBED) FOR MORE THAN 21 DAYS OR ON AREAS AND PORTIONS OF THE SITE WHICH CAN BE BROUGHT TO FINAL GRADE.
2. MULCH SHALL CONSIST OF ONE OF THE FOLLOWING:
   A) STRAW - STRAW SHALL BE UNROTTED SMALL GRAIN STRAW APPLIED AT THE RATE OF 2 TONS/AC. OR 90 LB/1,000 SQ. FT. (TWO TO THREE BALES). THE STRAW MULCH SHALL BE SPREAD UNIFORMLY BY HAND OR MECHANICALLY SO THE SOIL SURFACE IS COVERED. FOR UNIFORM DISTRIBUTION OF HAND-SPREAD MULCH, DIVIDE AREA INTO APPROXIMATELY 1,000 SQ. FT. SECTIONS AND PLACE TWO 45-LB. BALES OF STRAW IN EACH SECTION.
   B) HYDROSEEDERS - WOOD CELLULOSE FIBER SHOULD BE USED AT 2,000 LB./AC. OR 46 LB./1,000 SQ. FT.
   C) OTHER - ACCEPTABLE MULCHES INCLUDE MULCH MATTINGS AND ROLLED EROSION CONTROL PRODUCTS APPLIED ACCORDING TO MANUFACTURER'S RECOMMENDATIONS OR WOOD MULCH/CHIPS APPLIED AT 10-20 TONS/AC.
3. MULCH ANCHORING - MULCH SHALL BE ANCHORED IMMEDIATELY TO MINIMIZE LOSS BY WIND OR RUNOFF. THE FOLLOWING ARE ACCEPTABLE METHODS FOR ANCHORING MULCH.
   A) MECHANICAL - USE A DISK, CRIMPER, OR SIMILAR TYPE TOOL SET STRAIGHT TO PUNCH OR ANCHOR THE MULCH MATERIAL INTO THE SOIL. STRAW MECHANICALLY ANCHORED SHALL NOT BE FINELY CHOPPED BUT BE LEFT GENERALLY LONGER THAN 6 INCHES.

   MULCH NETTINGS - USE ACCORDING TO THE MANUFACTURER'S RECOMMENDATIONS, FOLLOWING ALL PLACEMENT AND ANCHORING REQUIREMENTS. USE IN AREAS OF WATER CONCENTRATION AND STEEP SLOPES TO HOLD MULCH IN PLACE.

   SYNTHETIC BINDERS - FOR STRAW MULCH, SYNTHETIC BINDERS SUCH AS ACRYLIC OLR (AGRI-TAC), DGA-70, PETROSET, TERRA TACK OR EQUAL MAY BE USED AT RATES RECOMMENDED BY THE MANUFACTURER. ALL APPLICATIONS OF SYTHETIC BINDERS MUST BE CONDUCTED IN SUCH A MANNER WHERE THERE IS NO CONTACT WITH WATERS OF THE STATE.

   WOOD CELLULOSE FIBER - WOOD CELLULOSE FIBER MAY BE USED FOR ANCHORING STRAW. THE FIBER BINDER SHALL BE APPLIED AT A NET DRY WEIGHT OF 75 LB./ACRE. THE WOOD CELLULOSE FIBER SHALL BE MIXED WITH WATER AND THE MIXTURE SHALL CONTAIN A MAXIMUM OF 50 LB./100 GAL. OF WOOD CELLULOSE FIBER.

SPECIFICATIONS FOR PERMANENT SEEDING

SEEDBED PREPARATION

1. ALL DISTURBED AREAS THAT WERE PREVIOUSLY DEVELOPED SHALL BE REPAIRED WITH SEEDING, FERTILIZING AND MULCHING OVER A MINIMUM OF 2" TOPSOIL. DISTURBED AREAS THAT WERE PREVIOUSLY UNDERVELOPED SHALL BE SEEDED, FERTILIZED AND MULCHED AS PER ODOT.
2. LIME-AGRICULTURAL GROUND LIMESTONE SHALL BE APPLIED TO ACID SOIL AS RECOMMENDED BY A SOIL TEST. IN LIEU OF A SOIL TEST, LIME SHALL BE APPLIED AT THE RATE OF 100 POUNDS PER 1,000-SQ. FT. OR 2 TONS PER ACRE.
3. FERTILIZER-FERTILIZER SHALL BE APPLIED AS RECOMMENDED BY A SOIL TEST. IN PLACE OF A SOIL TEST, FERTILIZER SHALL BE APPLIED AT A RATE OF 25 POUNDS PER 1000-SQ. FT. OR 1000 POUNDS PER ACRE OF A 10-10-10 OR 12-12-12 ANALYSES.
4. THE LIME AND FERTILIZER SHALL BE WORKED INTO THE SOIL WITH A DISK HARROW, SPRING-TOOTH HARROW, OR OTHER SUITABLE FIELD IMPLEMENT TO A DEPTH OF 3 INCHES. ON SLOPING LAND, THE SOIL SHALL BE WORKED ON THE CONTOUR.

SEEDING DATES AND SOIL CONDITIONS

SEEDING SHOULD BE DONE MARCH 1 TO MAY 31 OR AUGUST 1 TO SEPTEMBER 30. IF SEEDING OCCURS OUTSIDE OF THE ABOVE-SPECIFIED DATES, ADDITIONAL MULCH AND IRRIGATION MAY BE REQUIRED TO ENSURE A MINIMUM OF 80% GERMINATION. TILLAGE FOR SEEDBED PREPARATION SHOULD BE DONE WHEN THE SOIL IS DRY ENOUGH TO CRUMBLE AND NOT FORM RIBBONS WHEN COMPRESSED BY HAND. FOR WINTER SEEDING, SEE THE FOLLOWING SECTION ON DORMANT SEEDING.

DORMANT SEEDINGS

1. SEEDINGS SHOULD NOT BE MADE FROM OCTOBER 1 THROUGH NOVEMBER 20. DURING THIS PERIOD, THE SEEDS ARE LIKELY TO GERMINATE BUT PROBABLY WILL NOT BE ABLE TO SURVIVE THE WINTER.
2. THE FOLLOWING METHODS MAY BE USED FOR DORMANT SEEDING:
   A) FROM OCTOBER 1 THROUGH NOVEMBER 20, PREPARE THE SEED-BED, ADD THE REQUIRED AMOUNTS OF LIME AND FERTILIZER, THEN MULCH AND ANCHOR. AFTER NOVEMBER 20, AND BEFORE MARCH 15, BROADCAST THE SELECTED SEED MIXTURE. INCREASE THE SEEDING RATES BY 50% FOR THIS TYPE OF SELECTED SEED MIXTURE, MULCH AND ANCHOR. INCREASE THE SEEDING RATES BY 50% FOR THIS TYPE OF SEEDING.
   B) APPLY SEED UNIFORMLY WITH A CYCLONE SEEDER, DRILL, CULTIPACKER SEEDER, OR HYDRO-SEEDER (SLURRY MAY INCLUDE SEED AND FERTILIZER) ON A FIRM, MOIST SEEDBED.
   C) WHERE FEASIBLE, EXCEPT WHEN A CULTIPACKER TYPE SEEDER IS USED, THE SEEDBED SHOULD BE FIRMED FOLLOWING SEEDING OPERATIONS WITH A CULTIPACKER, ROLLER, OR LIGHT DRAG. ON SLOPING LAND, SEEDING OPERATIONS SHOULD BE ON THE CONTOUR WHERE FEASIBLE.

MULCHING

1. MULCH MATERIAL SHALL BE APPLIED IMMEDIATELY AFTER SEEDING. DORMANT SEEDING SHALL BE MULCHED. 100% OF THE GROUND SURFACE SHALL BE COVERED WITH AN APPROVED MATERIAL.
2. MATERIALS
   A) STRAW - IF STRAW IS USED IT SHALL BE UNROTTED SMALL-GRAIN STRAW APPLIED AT THE RATE OF 2 TONS PER ACRE OR 90 POUNDS (TWO TO THREE BALES) PER 1,000-SQ. FT. THE MULCH SHALL BE SPREAD UNIFORMLY BY HAND OR MECHANICALLY APPLIED SO THE SOIL SURFACE IS COVERED. FOR UNIFORM DISTRIBUTION OF HAND- SPREAD MULCH, DIVIDE AREA INTO APPROXIMATELY 1,000-SQ. FT. SECTIONS AND SPREAD TWO 45-LB. BALES OF STRAW IN EACH SECTION.
   B) HYDROSEEDERS - IF WOOD CELLULOSE FIBER IS USED, IT SHALL BE APPLIED AT 2,000 LB/AC. OR 40 LB/1,000 SQ. FT.
   C) OTHER - OTHER ACCEPTABLE MULCHES INCLUDE ROLLED EROSION CONTROL MATTINGS OR BLANKETS APPLIED ACCORDING TO MANUFACTURER'S RECOMMENDATIONS OR WOOD CHIPS APPLIED AT 6 TONS PER ACRE.
3. STRAW AND MULCH ANCHORING METHODS

   STRAW MULCH SHALL BE ANCHORED IMMEDIATELY TO MINIMIZE LOSS BY WIND OR WATER.
   A) MECHANICAL - A DISK, CRIMPER, OR SIMILAR TYPE TOOL SHALL BE SET STRAIGHT TO PUNCH OR ANCHOR THE MULCH MATERIAL INTO THE SOIL. STRAW MECHANICALLY ANCHORED SHALL NOT BE FINELY CHOPPED BUT, GENERALLY, BE LEFT LONGER THAN 6 INCHES.
   B) MULCH NETTING - NETTING SHALL BE USED ACCORDING TO THE MANUFACTURER'S RECOMMENDATIONS. NETTING MAY BE NECESSARY TO HOLD MULCH IN PLACE IN AREAS OF CONCENTRATED RUNOFF AND ON CRITICAL SLOPES.
   C) ASPHALT EMULSION - ASPHALT SHALL BE APPLIED AS RECOMMENDED BY THE MANUFACTURE OR AT THE RATE OF 160 GALLONS PER ACRE.
   D) SYNTHETIC BINDERS - SYNTHETIC BINDERS SUCH AS ACRYLIC DLR (AGRI-TAC), DCA-70, PETROSET, TERRA TACK OR EQUIVALENT MAY BE USED AT RATES SPECIFIED BY THE MANUFACTURER.
   E) WOOD CELLULOSE FIBER - WOOD CELLULOSE FIBER SHALL BE APPLIED AT A NET DRY WEIGHT OF 750 POUNDS PER ACRE. THE WOOD CELLULOSE FIBER SHALL BE MIXED WITH WATER WITH THE MIXTURE CONTAINING A MAXIMUM OF 50 POUNDS CELLULOSE PER 100 GALLONS OF WATER.

IRRIGATION

PERMANENT SEEDING SHALL INCLUDE IRRIGATION TO ESTABLISH VEGETATION DURING DRY WEATHER OR ON ADVERSE SITE CONDITIONS, WHICH REQUIRE ADEQUATE MOISTURE FOR SEED GERMINATION AND PLANT GROWTH.

IRRIGATION RATES SHALL BE MONITORED TO PREVENT EROSION AND DAMAGE TO SEEDED AREAS FROM EXCESSIVE RUNOFF.

PERMANENT SEEDING

PERMANENT SEED MIX SHALL CONFORM TO ODOT CMS 659 CLASS 1 LAWN MIXTURE.

CALCULATED VMB
CHECKED ERP

STORMWATER POLLUTION PREVENTION PLAN NOTES

NORTH RIDGEVILLE

EUTHENICS
8235 MOHAWK DRIVE., STRONGSVILLE, OHIO 44136

F:\Jobs\1254-TJB Site Expansion\Design\Sheets\1254_EC01.dwg 14-May-24 9:52 AM

CONCRETE WASHOUT AREAS

INSTALLATION

1. CONCRETE WASH WATER SHALL NOT BE ALLOWED TO FLOW TO STREAMS, DITCHES, STORM DRAINS, OR ANY OTHER WATER CONVEYANCE AND WASHOUT PITS SHALL BE SITUATED A MINIMUM OF FIFTY (50) FEET FROM THEM.
2. FIELD TILE OR OTHER SUBSURFACE DRAINAGE STRUCTURES WITHIN 10 FT. OF THE SUMP SHALL BE CUT AND PLUGGED.
3. ENSURE A STABLE PATH IS PROVIDED FOR CONCRETE TRUCKS TO REACH THE WASHOUT AREA.
4. A HIGHLY VISIBLE SIGN THAT READS "CONCRETE WASHOUT AREA" SHALL BE ERECTED ADJACENT TO THE WASHOUT PIT.
5. SURFACE RUNOFF GENERATED FROM UPSLOPE AREAS SHALL BE DIVERTED AWAY FROM BELOW-GRADE WASHOUT PITS SO AS NOT TO FLOW INTO THEM.
6. A SINGLE CENTRALIZED WASHOUT AREA MAY BE UTILIZED FOR MULTIPLE SUBLOTS.

MAINTENANCE

7. THE WASHOUT PIT MUST BE INSPECTED FREQUENTLY TO ENSURE THE LINER IS INTACT.
8. ONCE 75% OF THE ORIGINAL VOLUME OF THE WASHOUT PIT IS FILLED OR IF THE LINER IS TORN, THE MATERIAL MUST BE REMOVED AND PROPERLY DISPOSED OF ONCE IT IS COMPLETELY HARDENED. ONCE THE HARDENED CONCRETE IS REMOVED, THE LINER MUST BE REPLACED (IF TORN). A NEW PIT MUST BE CONSTRUCTED IF THE ORIGINAL STRUCTURE IS NO LONGER SUITABLE.

REMOVAL

9. ONCE THE WASHOUT PIT IS NO LONGER NEEDED, ENSURE ALL WASHOUT MATERIAL HAS COMPLETELY HARDENED, THEN REMOVE AND PROPERLY DISPOSE OF ALL MATERIALS. IF STRAW BALES WERE USED, THEY CAN BE SPREAD AS MULCH.
10. PREFABRICATED CONTAINERS SPECIFICALLY DESIGNED FOR CONCRETE WASHOUT COLLECTION MAY BE USED SUBJECT TO PRIOR APPROVAL BY THE COMMUNITY ENGINEER. FOLLOW THE MANUFACTURER'S SUGGESTIONS FOR INSTALLATION, MAINTENANCE AND REMOVAL PROCEDURES.

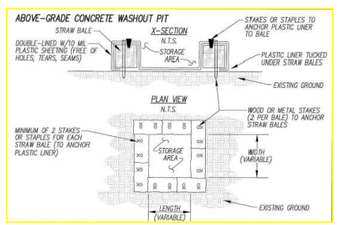

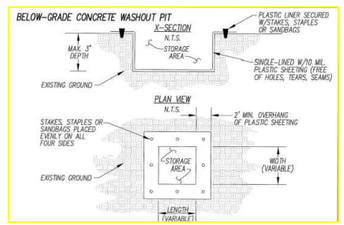

SPECIFICATIONS FOR SILT FENCE

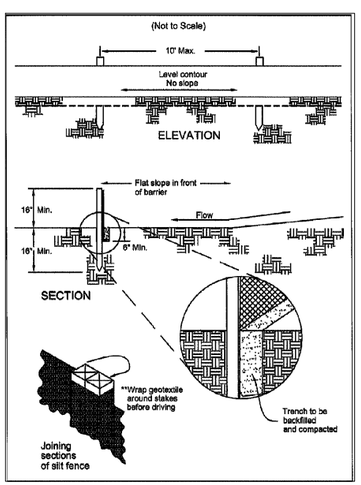

CRITERIA FOR SILT FENCE MATERIALS

1. SILT FENCE SHALL BE CONSTRUCTED BEFORE UPSLOPE LAND DISTURBANCE BEGINS.
2. ALL SILT FENCE SHALL BE PLACED AS CLOSE TO THE CONTOUR AS POSSIBLE SO THAT WATER WILL NOT CONCENTRATE AT LOW POINTS IN THE FENCE AND SO THAT SMALL SWALES OR DEPRESSIONS THAT MAY CARRY SMALL CONCENTRATED FLOWS TO THE SILT FENCE ARE DISSIPATED ALONG ITS LENGTH.
3. ENDS OF THE SILT FENCES SHALL BE BROUGHT UPSLOPE SLIGHTLY SO THAT WATER PONDED BY THE SILT FENCE WILL BE PREVENTED FROM FLOWING AROUND THE ENDS.
4. SILT FENCE SHALL BE PLACED ON THE FLATTEST AREA AVAILABLE.
5. WHERE POSSIBLE, VEGETATION SHALL BE PRESERVED FOR 5 FEET (OR AS MUCH AS POSSIBLE) UPSLOPE FROM THE SILT FENCE. IF VEGETATION IS REMOVED, IT SHALL BE REESTABLISHED WITHIN 7 DAYS FROM THE INSTALLATION OF THE SILT FENCE.
6. THE HEIGHT OF THE SILT FENCE SHALL BE A MINIMUM OF 16 INCHES ABOVE THE ORIGINAL GROUND SURFACE.
7. THE SILT FENCE SHALL BE PLACED IN AN EXCAVATED OR SLICED TRENCH CUT A MINIMUM OF 6 INCHES DEEP. THE TRENCH SHALL BE MADE WITH A TRENCHER, CABLE LAYING MACHINE, SLICING MACHINE, OR OTHER SUITABLE DEVICE THAT WILL ENSURE AN ADEQUATELY UNIFORM TRENCH DEPTH.
8. THE SILT FENCE SHALL BE PLACED WITH THE STAKES ON THE DOWNSLOPE SIDE OF THE GEOTEXTILE. A MINIMUM OF 8 INCHES OF GEOTEXTILE MUST BE BELOW THE GROUND SURFACE. EXCESS MATERIAL SHALL LAY ON THE BOTTOM OF THE 6-INCH DEEP TRENCH. THE TRENCH SHALL BE BACKFILLED AND COMPACTED ON BOTH SIDES OF THE FABRIC.
9. SEAMS BETWEEN SECTIONS OF SILT FENCE SHALL BE SPLICED TOGETHER ONLY AT A SUPPORT POST WITH A MINIMUM 6-IN. OVERLAP PRIOR TO DRIVING INTO THE GROUND, (SEE DETAILS).
10. MAINTENANCE - SILT FENCE SHALL ALLOW RUNOFF TO PASS ONLY AS DIFFUSE FLOW THROUGH THE GEOTEXTILE. IF RUNOFF OVER- TOPS THE SILT FENCE, FLOWS UNDER THE FABRIC OR AROUND THE FENCE ENDS, OR IN ANY OTHER WAY ALLOWS A CONCENTRATED FLOW DISCHARGE, ONE OF THE FOLLOWING SHALL BE PERFORMED, AS APPROPRIATE: 1) THE LAYOUT OF THE SILT FENCE SHALL BE CHANGED, 2) ACCUMULATED SEDIMENT SHALL BE REMOVED, OR 3) OTHER PRACTICES SHALL BE INSTALLED.

SEDIMENT DEPOSITS SHALL BE ROUTINELY REMOVED WHEN THE DEPOSIT REACHES APPROXIMATELY ONE-HALF OF THE HEIGHT OF THE SILT FENCE.

SILT FENCES SHALL BE INSPECTED AFTER EACH RAINFALL AND AT LEAST DAILY DURING A PROLONGED RAINFALL. THE LOCATION OF EXISTING SILT FENCE SHALL BE REVIEWED DAILY TO ENSURE ITS PROPER LOCATION AND EFFECTIVENESS. IF DAMAGED, THE SILT FENCE SHALL BE REPAIRED IMMEDIATELY.

CRITERIA FOR SILT FENCE MATERIALS

1. FENCE POST - THE LENGTH SHALL BE A MINIMUM OF 32 INCHES. WOOD POSTS WILL BE 2-BY-2-IN. NOMINAL DIMENSIONED HARDWOOD OF SOUND QUALITY. THEY SHALL BE FREE OF KNOTS, SPLITS AND OTHER VISIBLE IMPERFECTIONS, THAT WILL WEAKEN THE POSTS. THE MAXIMUM SPACING BETWEEN POSTS SHALL BE 10 FT. POSTS SHALL BE DRIVEN A MINIMUM 16 INCHES INTO THE GROUND, WHERE POSSIBLE. IF NOT POSSIBLE, THE POSTS SHALL BE ADEQUATELY SECURED TO PREVENT OVERTURNING OF THE FENCE DUE TO SEDIMENT/WATER LOADING.
2. SILT FENCE FABRIC - SEE CHART BELOW.

TABLE 6.3.2 MINIMUM CRITERIA FOR SILT FENCE FABRIC (OOOT, 2008)

Table 6.3.2 Minimum criteria for Silt Fence Fabric (ODOT, 2002)

FABRIC PROPERTIES	VALUES	TEST METHOD
Minimum Tensile Strength	120 lbs. (535 N)	ASTM D 4632
Maximum Elongation at 60 lbs	50%	ASTM D 4632
Minimum Puncture Strength	50 lbs (220 N)	ASTM D 4833
Minimum Tear Strength	40 lbs (180 N)	ASTM D 4533
Apparent Opening Size	≤ 0.84 mm	ASTM D 4751
Minimum Permittivity	1X10-2 sec.-1	ASTM D 4491
UV Exposure Strength Retention	70%	ASTM G 4355

SPECIFICATIONS FOR BLOCK AND GRAVEL DROP INLET FILTER

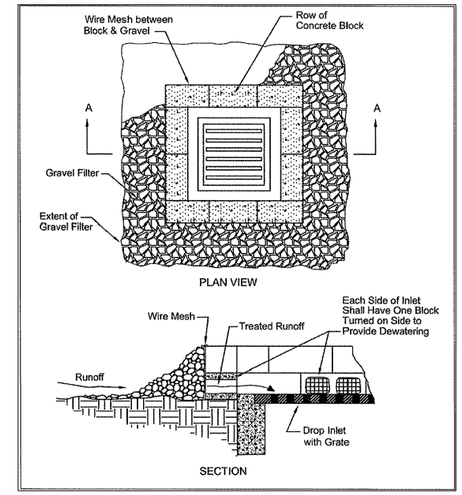

1. PLACE 4-INCH BY 8-INCH BY 12-INCH CONCRETE BLOCKS LENGTHWISE ON THEIR SIDES IN A SINGLE ROW AROUND THE PERIMETER OF THE INLET, WITH THE ENDS OF ADJACENT BLOCKS ABUTTING. THE HEIGHT OF THE BARRIER CAN BE VARIED, DEPENDING UPON THE DESIGN NEEDS, BY STACKING COMBINATIONS OF THE SAME SIZE BLOCKS. THE BARRIER OF BLOCKS SHOULD BE AT LEAST 12-INCHES HIGH BUT NO GREATER THAN 24-INCHES HIGH.
2. WIRE MESH SHOULD BE PLACED OVER THE OUTSIDE VERTICAL FACE (WEBBING) OF THE CONCRETE BLOCKS TO PREVENT STONE FROM BEING WASHED THROUGH THE BLOCK CORES. HARDWARE CLOTH OR COMPARABLE WIRE MESH WITH 1/2-INCH OPENINGS SHOULD BE USED.
3. TWO-INCH STONE SHOULD BE PILED AGAINST THE WIRE TO THE TOP OF THE BLOCK BARRIER, AS SHOWN BELOW.
4. IF THE STONE FILTER BECOMES CLOGGED WITH SEDIMENT SO THAT IT NO LONGER ADEQUATELY PERFORMS ITS FUNCTION, PULL STONE AWAY FROM THE BLOCKS, CLEAN AND/OR REPLACE.

SPECIFICATIONS FOR GEOTEXTILE-STONE INLET PROTECTION

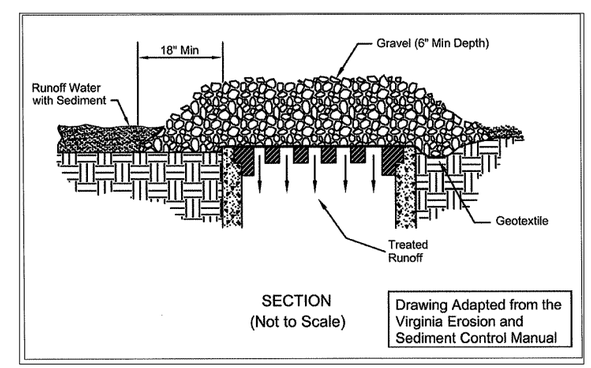

1. INLET PROTECTION SHALL BE CONSTRUCTED EITHER BEFORE UPSLOPE LAND DISTURBANCE BEGINS OR BEFORE THE INLET BECOMES FUNCTIONAL.
2. GEOTEXTILE AND/OR WIRE MATERIAL SHALL BE PLACED OVER THE TOP OF THE STORM SEWER AND APPROXIMATELY SIX (6) INCHES OF 2-INCH OR SMALLER CLEAN AGGREGATE PLACED ON TOP. EXTRA SUPPORT FOR GEOTEXTILE IS PROVIDED BY PLACING HARDWARE CLOTH OR WIRE MESH ACROSS THE INLET COVER. THE WIRE SHOULD BE NO LARGER THAN ½-INCH MESH AND SHOULD EXTEND AN EXTRA 12 INCHES ACROSS THE TOP AND SIDES OF THE INLET COVER.
3. MAINTENANCE MUST BE PERFORMED REGULARLY, ESPECIALLY AFTER STORM EVENTS. WHEN CLOGGING OF THE STONE OR GEOTEXTILE OCCURS, THE MATERIAL MUST BE REMOVED AND REPLACED.

CALCULATED VMB
CHECKED ERP

STORMWATER POLLUTION PREVENTION PLAN NOTES

NORTH RIDGEVILLE

EUTHENICS
8235 MOHAWK DRIVE., STRONGSVILLE, OHIO 44136

11
13

F:\Jobs\1254-TJB Site Expansion\Design\Sheets\1254_EC01.dwg 14-May-24 9:52 AM

EROSION AND SEDIMENT CONTROL (CONT'D)

SPECIFICATIONS FOR CURB INLET PROTECTION

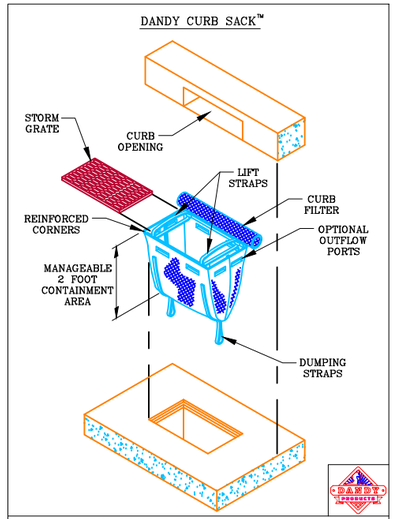

DETAIL OF INLET SEDIMENT CONTROL DEVICE WITH CURB FILTER

NOTE: THE DANDY CURB SACK™ WILL BE **MANUFACTURED IN THE U.S.A.** FROM A WOVEN MONOFILAMENT FABRIC THAT MEETS OR EXCEEDS THE FOLLOWING SPECIFICATIONS:

REGULAR FLOW DANDY CURB SACK™ (BLACK)

Mechanical Properties	Test Method	Units	MARV
Grab Tensile Strength	ASTM D 4632	kN (lbs)	1.78 (400) x 1.40 (315)
Grab Tensile Elongation	ASTM D 4632	%	15 x 15
Puncture Strength	ASTM D 4833	kN (lbs)	0.67 (150)
Mullen Burst Strength	ASTM D 3786	kPa (psi)	5506 (800)
Trapezoid Tear Strength	ASTM D 4533	kN (lbs)	0.67 (150) x 0.73 (165)
UV Resistence	ASTM D 4355	%	90
Apparent Opening Size	ASTM D 4751	Mm (US Std Sieve)	0.425 (40)
Flow Rate	ASTM D 4491	$1/min/m^2$ ($gal/min/ft^2$)	2852 (70)
Permittivity	ASTM D 4491	Sec^{-1}	0.90

HI-FLOW DANDY CURB SACK™ (SAFETY ORANGE)

Mechanical Properties	Test Method	Units	MARV
Grab Tensile Strength	ASTM D 4632	kN (lbs)	1.62 (365) X 0.89 (200)
Grab Tensile Elongation	ASTM D 4632	%	24 X 10
Puncture Strength	ASTM D 4833	kN (lbs)	0.40 (90)
Mullen Burst Strength	ASTM D 3786	kPa (psi)	3097 (450)
Trapezoid Tear Strength	ASTM D 4533	kN (lbs)	0.51 (115) X 0.33 (75)
UV Resistence	ASTM D 4355	%	90
Apparent Opening Size	ASTM D 4751	Mm (US Std Sieve)	0.425 (40)
Flow Rate	ASTM D 4491	$1/min/m^2$ ($gal/min/ft^2$)	5907 (145)
Permittivity	ASTM D 4491	Sec^{-1}	2.1

*Note: All Dandy Sacks™ can be ordered with our optional oil absorbent pillows

DANDY CURB SACK™
AS MANUFACTURED BY DANDY PRODUCTS
(OR APPROVED EQUIVALENT)
SPECIFICATIONS

SPECIFICATIONS FOR GEOTEXTILE INLET PROTECTION

1. INLET PROTECTION SHALL BE CONSTRUCTED EITHER BEFORE UPSLOPE LAND DISTURBANCE BEGINS OR BEFORE THE INLET BECOMES FUNCTIONAL.
2. THE EARTH AROUND THE INLET SHALL BE EXCAVATED COMPLETELY TO A DEPTH AT LEAST 18 INCHES.
3. THE WOODEN FRAME SHALL BE CONSTRUCTED OF 2-INCH BY 4-INCH CONSTRUCTION GRADE LUMBER. THE 2-INCH BY 4-INCH POSTS SHALL BE DRIVEN ONE (1) FOOT INTO THE GROUND AT FOUR CORNERS OF THE INLET AND THE TOP PORTION OF 2-INCH BY 4-INCH FRAME ASSEMBLED USING THE OVERLAP JOINT SHOWN. THE TOP OF THE FRAME SHALL BE AT LEAST 6 INCHES BELOW ADJACENT ROADS IF PONDED WATER WILL POSE A SAFETY HAZARD TO TRAFFIC.
4. WIRE MESH SHALL BE OF SUFFICIENT STRENGTH TO SUPPORT FABRIC WITH WATER FULLY IMPOUNDED AGAINST IT. IT SHALL BE STRETCHED TIGHTLY AROUND THE FRAME AND FASTENED SECURELY TO THE FRAME.
5. GEOTEXTILE MATERIAL SHALL HAVE AN EQUIVALENT OPENING SIZE OF 20-40 SIEVE AND BE RESISTANT TO SUNLIGHT. IT SHALL BE STRETCHED TIGHTLY AROUND THE FRAME AND FASTENED SECURELY. IT SHALL EXTEND FROM THE TOP OF THE FRAME TO 18 INCHES BELOW THE INLET NOTCH ELEVATION. THE GEOTEXTILE SHALL OVERLAP ACROSS ONE SIDE OF THE INLET SO THE ENDS OF THE CLOTH ARE NOT FASTENED TO THE SAME POST.
6. BACKFILL SHALL BE PLACED AROUND THE INLET IN COMPACTED 6-INCH LAYERS UNTIL THE EARTH IS EVEN WITH NOTCH ELEVATION ON ENDS AND TOP ELEVATION ON SIDES.
7. A COMPACTED EARTH DIKE OR CHECK DAM SHALL BE CONSTRUCTED IN THE DITCH LINE BELOW THE INLET IF THE INLET IS NOT IN A DEPRESSION. THE TOP OF THE DIKE SHALL BE AT LEAST 6 INCHES HIGHER THAN THE TOP OF THE FRAME.

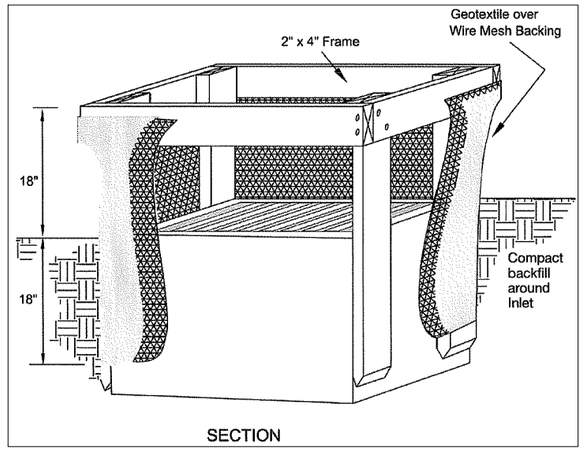

SECTION

SPECIFICATIONS FOR DUST CONTROL

1. VEGETATIVE COVER AND/MULCH - APPLY TEMPORARY OR PERMANENT SEEDING AND MULCH TO AREAS THAT WILL REMAIN IDLE FOR OVER 21 DAYS. SAVING EXISTING TREES AND LARGE SHRUBS WILL ALSO REDUCE SOIL AND AIR MOVEMENT ACROSS DISTURBED AREAS. SEE TEMPORARY SEEDING; PERMANENT SEEDING; MULCHING PRACTICES; AND TREE AND NATURAL AREA PROTECTION PRACTICES.
2. WATERING - SPRAY SITE WITH WATER UNTIL THE SURFACE IS WET BEFORE AND DURING GRADING AND REPEAT AS NEEDED, ESPECIALLY ON HAUL ROADS AND OTHER HEAVY TRAFFIC ROUTES. WATERING SHALL BE DONE AT A RATE THAT PREVENTS DUST BUT DOES NOT CAUSE SOIL EROSION. WETTING AGENTS SHALL BE UTILIZED ACCORDING TO MANUFACTURERS INSTRUCTIONS.
3. SPRAY-ON ADHESIVES - APPLY ADHESIVE ACCORDING TO THE FOLLOWING TABLE OR MANUFACTURERS' INSTRUCTIONS.

TABLE 7.5.1 ADHESIVES FOR DUST CONTROL

Adhesive	Water Dilution (Adhesive: Water)	Nozzle Type	Application Rate Gal./Ac.
Latex Emulsion	12.5:1	Fine	235
Resin in Water Acrylic Emulsion (No-traffic)	4:1	Fine	300
Acrylic Emulsion (No-traffic)	7:1	Coarse	450
Acrylic Emulsion (Traffic)	3.5:1	Coarse	350

4. STONE - GRADED ROADWAYS AND OTHER SUITABLE AREAS WILL BE STABILIZED USING CRUSHED STONE OR COARSE GRAVEL AS SOON AS PRACTICABLE AFTER REACHING AN INTERIM OR FINAL GRADE. CRUSHED STONE OR COARSE GRAVEL CAN BE USED AS A PERMANENT COVER TO PROVIDE CONTROL OF SOIL EMISSIONS.
5. BARRIERS - EXISTING WINDBREAK VEGETATION SHALL BE MARKED AND PRESERVED. SNOW FENCING OR OTHER SUITABLE BARRIER MAY BE PLACED PERPENDICULAR TO PREVAILING AIR CURRENTS AT INTERVALS OF ABOUT 15 TIMES THE BARRIER HEIGHT TO CONTROL AIR CURRENTS AND BLOWING SOIL.
6. CALCIUM CHLORIDE - THIS CHEMICAL MAY BE APPLIED BY MECHANICAL SPREADER AS LOOSE, DRY GRANULES OR FLAKES AT A RATE THAT KEEPS THE SURFACE MOIST BUT NOT SO HIGH AS TO CAUSE WATER POLLUTION OR PLANT DAMAGE. APPLICATION RATES SHOULD BE STRICTLY IN ACCORDANCE WITH SUPPLIERS' SPECIFIED RATES.
7. OPERATION AND MAINTENANCE - WHEN TEMPORARY DUST CONTROL MEASURES ARE USED; REPETITIVE TREATMENT SHOULD BE APPLIED AS NEEDED TO ACCOMPLISH CONTROL.
8. STREET CLEANING - PAVED AREAS THAT HAVE ACCUMULATED SEDIMENT FROM CONSTRUCTION SHOULD BE CLEANED DAILY, OR AS NEEDED, UTILIZING A STREET VACUUM OR BUCKET-TYPE ENDLOADER OR SCRAPER.

SPECIFICATIONS FOR ADDITIONAL CONSTRUCTION SITE POLLUTION CONTROLS

1. INSTRUCTION PERSONNEL, INCLUDING SUBCONTRACTORS WHO MAY USE OR HANDLE HAZARDOUS OR TOXIC MATERIALS, SHALL BE MADE AWARE OF THE FOLLOWING GENERAL GUIDELINES REGARDING DISPOSAL AND HANDLING OF HAZARDOUS AND CONSTRUCTION WASTES:
   - A. PREVENT SPILLS
   - B. USE PRODUCTS UP
   - C. FOLLOW LABEL DIRECTIONS FOR DISPOSAL
   - D. REMOVE LIDS FROM EMPTY BOTTLES AND CANS WHEN DISPOSING IN TRASH
   - E. RECYCLE WASTES WHENEVER POSSIBLE
   - F. DON'T POUR INTO WATERWAYS, STORM DRAINS OR ONTO THE GROUND
   - G. DON'T POUR DOWN THE SINK, FLOOR DRAIN OR SEPTIC TANKS
   - H. DON'T BURY CHEMICALS OR CONTAINERS
   - I. DON'T BURN CHEMICALS OR CONTAINERS
   - J. DON'T MIX CHEMICALS TOGETHER
2. CONTAINERS SHALL BE PROVIDED FOR THE PROPER COLLECTION OF ALL WASTE MATERIAL INCLUDING CONSTRUCTION DEBRIS, TRASH, PETROLEUM PRODUCTS AND ANY HAZARDOUS MATERIALS USED ON-SITE. CONTAINERS SHALL BE COVERED AND NOT LEAKING. ALL WASTE MATERIAL SHALL BE DISPOSED OF AT FACILITIES APPROVED FOR THAT MATERIAL. CONSTRUCTION DEMOLITION AND DEBRIS (CD&D) WASTE MUST BE DISPOSED OF AT AN OHIO EPA APPROVED CD&D LANDFILL.
3. NO CONSTRUCTION RELATED WASTE MATERIALS ARE TO BE BURIED ON-SITE WITHOUT THE WRITTEN PERMISSION OF THE ENGINEER. BY EXCEPTION, CLEAN FILL (BRICKS, HARDENED CONCRETE, SOIL) MAY BE UTILIZED, IF APPROVED BY THE ENGINEER, IN A WAY WHICH DOES NOT ENCROACH UPON NATURAL WETLANDS, STREAMS OR FLOODPLAINS OR RESULT IN THE CONTAMINATION OF WATERS OF THE STATE.
4. HANDLING CONSTRUCTION CHEMICALS. MIXING, PUMPING, TRANSFERRING OR OTHER HANDLING OF CONSTRUCTION CHEMICALS SUCH AS FERTILIZER, LIME, ASPHALT, CONCRETE DRYING COMPOUNDS, AND ALL OTHER POTENTIALLY HAZARDOUS MATERIALS SHALL BE PERFORMED IN AN AREA AWAY FROM ANY WATERCOURSE, DITCH OR STORM DRAIN.
5. EQUIPMENT FUELING AND MAINTENANCE, OIL CHANGING, ETC., SHALL BE PERFORMED AWAY FROM WATERCOURSES, DITCHES OR STORM DRAINS, IN AN AREA DESIGNATED FOR THAT PURPOSE. THE DESIGNATED AREA SHALL BE EQUIPPED FOR RECYCLING OIL AND CATCHING SPILLS. SECONDARY CONTAINMENT SHALL BE PROVIDED FOR ALL FUEL OIL STORAGE TANKS. THESE AREAS MUST BE INSPECTED EVERY SEVEN DAYS AND WITHIN 24 HOURS OF A 0.5 INCH OR GREATER RAIN EVENT TO ENSURE THERE ARE NO EXPOSED MATERIALS WHICH WOULD CONTAMINATE STORM WATER. SITE OPERATORS MUST BE AWARE THAT SPILL PREVENTION CONTROL AND COUNTERMEASURES (SPCC) REQUIREMENTS MAY APPLY. AN SPCC PLAN IS REQUIRED FOR SITES WITH ONE SINGLE ABOVE GROUND TANK OF 660 GALLONS OR MORE, ACCUMULATIVE ABOVE GROUND STORAGE OF 1330 GALLONS OR MORE, OR 42,000 GALLONS OF UNDERGROUND STORAGE. CONTAMINATED SOILS MUST BE DISPOSED OF IN ACCORDANCE WITH ITEM 8.
6. CONCRETE WASH WATER SHALL NOT BE ALLOWED TO FLOW TO STREAMS, DITCHES, STORM DRAINS, OR ANY OTHER WATER CONVEYANCE. A SUMP OR PIT WITH NO POTENTIAL FOR DISCHARGE SHALL BE CONSTRUCTED IF NEEDED TO CONTAIN CONCRETE WASH WATER. FIELD TILE OR OTHER SUBSURFACE DRAINAGE STRUCTURES WITHIN 10 FEET OF THE SUMP SHALL BE CUT AND PLUGGED. FOR SMALL PROJECTS, TRUCK CHUTES MAY BE RINSED AWAY FROM ANY WATER CONVEYANCES.
7. SPILL REPORTING REQUIREMENTS: SPILLS ON PAVEMENT SHALL BE ABSORBED WITH SAWDUST OR KITTY LITTER AND DISPOSED OF WITH THE TRASH AT A LICENSED SANITARY LANDFILL. HAZARDOUS OR INDUSTRIAL WASTES SUCH AS MOST SOLVENTS, GASOLINE, OIL-BASED PAINTS, AND CEMENT CURING COMPOUNDS REQUIRE SPECIAL HANDLING. SPILLS SHALL BE REPORTED TO OHIO EPA (1-800-282-9378). SPILLS OF 25 GALLONS OR MORE OF PETROLEUM PRODUCTS SHALL BE REPORTED TO OHIO EPA, THE LOCAL FIRE DEPARTMENT, AND THE LOCAL EMERGENCY PLANNING COMMITTEE WITHIN 30 MINUTES OF THE DISCOVERY OF THE RELEASE. ALL SPILLS WHICH CONTACT WATERS OF THE STATE MUST BE REPORTED TO OHIO EPA.
8. CONTAMINATED SOILS. IF SUBSTANCES SUCH AS OIL, DIESEL FUEL, HYDRAULIC FLUID, ANTIFREEZE, ETC. ARE SPILLED, LEAKED, OR RELEASED ONTO THE SOIL, THE SOIL SHOULD BE DUG UP AND DISPOSED OF AT LICENSED SANITARY LANDFILL OR OTHER APPROVED PETROLEUM CONTAMINATED SOIL REMEDIATION FACILITY. (NOT A CONSTRUCTION/DEMOLITION DEBRIS LANDFILL). NOTE THAT STORM WATER RUN OFF ASSOCIATED WITH CONTAMINATED SOIL ARE NOT BE AUTHORIZED UNDER OHIO EPA'S GENERAL STORM WATER PERMIT ASSOCIATED WITH CONSTRUCTION ACTIVITIES.
9. THE CONTRACTOR IS TO DESIGNATE AND MAINTAIN A CONCRETE WASH-OUT AREA IN AN AREA APPROVED BY THE ENGINEER. THE AREA IS TO BE PREPARED AND MAINTAINED IN ACCORDANCE WITH THE APPROVED STORM WATER POLLUTION PREVENTION PLAN.
10. IF THE CONTRACTOR ESTABLISHES A STORAGE/WORK AREA, AN ACCESS ZONE MUST BE ESTABLISHED AND MAINTAINED TO PREVENT TRACKING SEDIMENT ONTO THE PAVEMENT. THE ACCESS ZONE MUST BE PREPARED AND MAINTAINED IN ACCORDANCE WITH THE APPROVED STORM WATER POLLUTION PREVENTION PLAN.

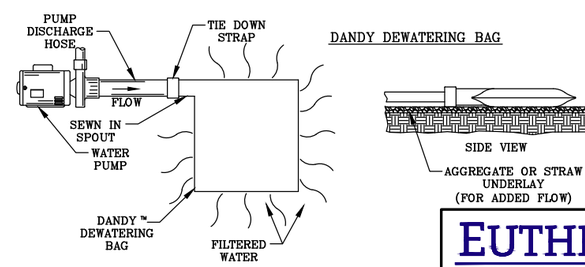

CALCULATED VMB
CHECKED ERP

STORMWATER POLLUTION PREVENTION PLAN NOTES

NORTH RIDGEVILLE

EUTHENICS
8235 MOHAWK DRIVE., STRONGSVILLE, OHIO 44136

12
13

F:\Jobs\1254-TJB Site Expansion\Design\Sheets\1254_EC01.dwg 14-May-24 9:52 AM

Specifications
for
Small Construction Site Controls

1. Preexisting vegetation shall be retained on idle portions of the building lot for as long as construction operations allow. Clearing shall be done so only active working areas are bare.

2. Temporary seed and/or mulch shall be applied to areas, such as stockpiles and rough graded areas, that are bare and not actively being worked. This shall apply to areas that will not be reworked for 21 days or more.

3. Stockpiles created from basement excavation and grading shall be situated away from streets, swales, or other waterways and shall be seeded and/or mulched immediately.

4. Silt fence or other sediment barriers shall control sheet flow runoff from the building lot. These shall not be constructed in channels or areas of concentrated flow. Other sediment controls such as sediment traps and inlet protection shall also be used as needed to control sediment runoff. Sediment control practices shall be inspected weekly after storm events, and maintained in good working condition.

5. Construction vehicle access shall be limited to one route, to the greatest extent practical. The access shall be gravel or crushed rock underlain with geotextile.

6. Mud tracked onto streets or sediment settled around curb inlet protection shall be removed daily or as needed to prevent it from accumulating. It shall be removed by shoveling and scraping and shall NOT be washed off paved surfaces or into storm drains. Sediment removed shall be placed where it will not be subject to erosion or concentrated runoff.

Specifications
for
Small Construction Site Controls

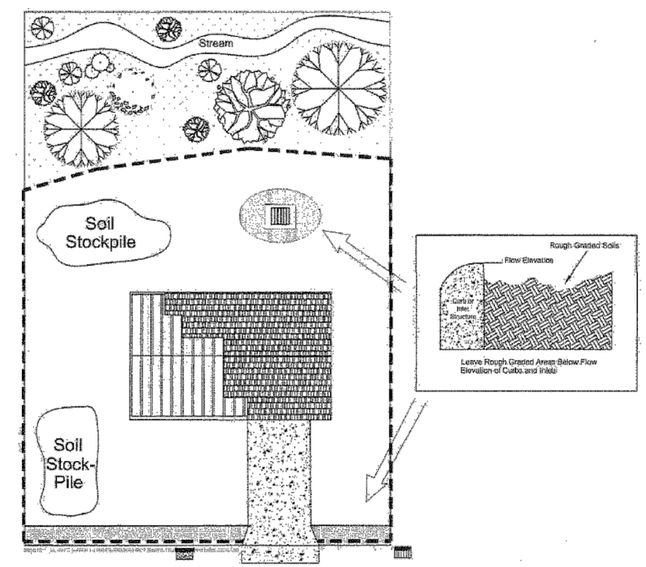

PLAN VIEW

- Temporary seeding and/or mulch applied to rough graded areas
- Construction Entrance gravel
- Rough grade areas to allow settling below grade elevation
- Storm Drain w/inlet protection
- Storm Drain without inlet protection
- Yard Drain w/ inlet protection
- Silt Fence
- Curb

INFORMATION OBTAINED FROM THE 2006 EDITION OF THE STATE OF OHIO'S "RAINWATER AND LAND DEVELOPMENT MANUAL".

REV No.	DATE	BY	DESCRIPTION

CITY OF NORTH RIDGEVILLE, OHIO
DEPARTMENT OF ENGINEERING

SMALL CONSTRUCTION SITE CONTROLS

SCALE: NOT TO SCALE
DATE: 10/01/08 | DRWN BY: JAB/TEB
SWP-32

CITY OF NORTH RIDGEVILLE, ENGINEER

CALCULATED VMB
CHECKED ERP

STORMWATER POLLUTION PREVENTION PLAN NOTES

NORTH RIDGEVILLE

EUTHENICS
8235 MOHAWK DRIVE., STRONGSVILLE, OHIO 44136

13
13

F:\Jobs\1254-TJB Site Expansion\Design\Sheets\1254_EC01.dwg 14-May-24 9:52 AM

BUILDING CODE SUMMARY

BUILDING CODE	OBC 2024
PROJECT AREA	24,240 SF (EXISTING) 10,080 SF (NEW) 34,320 SF (TOTAL)
USE AND OCCUPANCY	BUSINESS GROUP 'B' (306) - CONDUIT COUPLING MFG.
ALLOWABLE BUILDING HEIGHT IN FEET ABOVE GRADE PLANE	65 FEET (TABLE 504.3)
ALLOWABLE NUMBER OF STORIES ABOVE GRADE PLANE	3 STORIES (TABLE 504.4)
ALLOWABLE AREA	19,000 SF (TABLE 506.2)
CONSTRUCTION	TYPE IIIB (602.2), NOT SPRINKLERED
FIRE-RESISTANCE RATING FOR BUILDING ELEMENTS TABLE 601	BUILDING ELEMENT — TYPE VB PRIMARY STRUCTURAL FRAME — 0 BEARING WALLS, EXTERIOR — 2 ROOF CONSTRUCTION AND ASSOCIATED SECONDARY MEMBERS — 0
FIRE PROTECTION CHAPTER 9	FIRE SUPPRESSION SYSTEM PER NFPA 13 USE GROUP B - NOT REQUIRED (903.2.4) OPEN FRONTAGE CALCULATION
FIRE EXTINGUISHERS NFPA CHAPTER 10	MAXIMUM 3,000 SF PER EXTINGUISHER MAXIMUM TRAVEL DISTANCE 75 FEET
OCCUPANT LOAD TABLE 1004.1.2	BUSINESS AREAS- BY CALCULATION 100 SF GROSS PER OCCUPANT 34,320 SF/100 SF = 343 OCCUPANTS
EXIT ACCESS DOORWAYS	2 REQUIRED (TABLE 1006.3.1)
MEANS OF EGRESS ILLUMINATION	SECTION 1008 (NORMAL POWER WITH BATTERY BACK-UP EMERGENCY)
SIZE OF DOORS	32" MINIMUM CLEAR (1010.1.1)
EXIT SIGNS	SECTION 1013
ACCESSIBILITY	NOT A PLACE OF PUBLIC ACCOMMODATION-HEAVY PRODUCT ASSEMBLY

INDEX OF DRAWINGS

ARCHITECTURAL / MEP

A-1 PROJECT INFORMATION, SITE PLAN, AND CONSTRUCTION PLAN. CODE SUMMARY.
A-2 OVERALL PLAN AND CONSTRUCTION FLOOR PLAN
A-3 EXTERIOR ELEVATIONS, ENLARGED PLAN, AND INTERIOR ELEVATIONS
A-4 WALL SECTIONS AND DETAILS
A-5 ARCHITECTURAL SPECIFICATIONS
MEP-1 MECANICAL ELECTRICAL PLUMBING PLAN

STRUCTURAL

C-1 FOUNDATION PLAN
C-2 FOUNDATION SECTIONS AND DETAILS
C-3 CONCRETE MASONRY WALL PLAN
C-4 CONCRETE MASONRY WALL ELEVATION
C-5 MASONRY SECTIONS AND DETAILS

ICS STRUCTURES

1 SPECIFICATIONS
2 ANCHOR BOLT PLAN
3 BASE PLATE REACTIONS
4 BASE PLATE REACTIONS
5 BASE PLATE DETAILS
6 RIGID FRAME F.L. 1
7 RIGID FRAME F.L. 2
8 RIGID FRAME F.L. 3 & 4
9 SIDEWALL FRAMING & SHEETING F.L. A
10 SIDEWALL FRAMING & SHEETING F.L. 1
11 ENDWALL FRAMING & SHEETING F.L.1
12 ENDWALL FRAMING & SHEETING F.L. 1.8
13 ENDWALL FRAMING & SHEETING F.L. 5
14 ROOF FRAMING
15 ROOF SHEETING
16 DETAILS
17 DETAILS
18 DETAILS

INDEX OF DRAWINGS

CIVIL DRAWINGS

1/13 TITLE SHEET
2/13 GENERAL NOTES
3/13 TYPICAL SECTION
4/13 EXISTING CONDITION PLAN
5/13 PROPOSED SITE PLAN
6/13 PROPOSED UTILITY AND GRADING PLAN
7/13 MISCELLANEOUS DETAILS
8/13 MISCELLANEOUS DETAILS
9/13 PROPOSED UTILITY AND GRADING PLAN
10/13 STORMWATER POLLUTION PREVENTION PLAN NOTES
11/13 STORMWATER POLLUTION PREVENTION PLAN NOTES
12/13 STORMWATER POLLUTION PREVENTION PLAN NOTES
13/13 STORMWATER POLLUTION PREVENTION PLAN NOTES

PROJECT LOADS

ROOF SNOW LOAD: 30 PSF
ROOF LIVE LOAD: 20 PSF
FLOOR LIVE LOAD: 40 PSF
WIND LOAD: 115 MPH

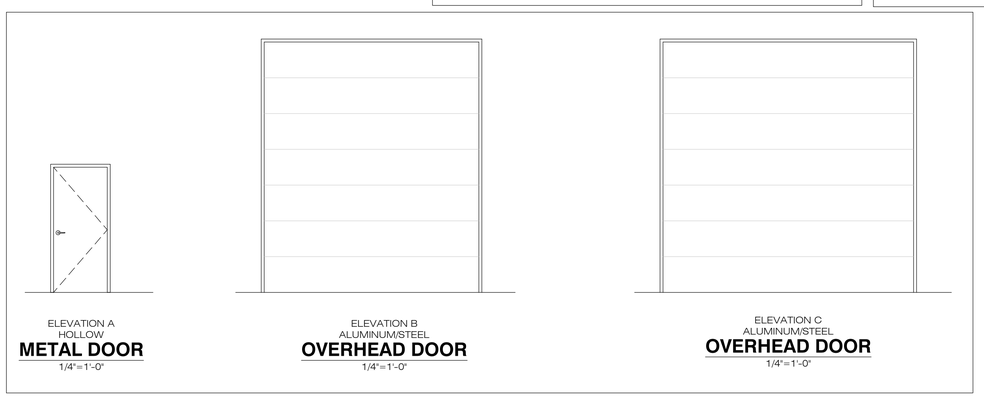

OPENING/DOOR SCHEDULE

OPENING NUMBER	OPENING WIDTH	OPENING HEIGHT	DOOR MATERIAL	DOOR THICKNESS	DOOR ELEVATION	GLAZING	RATING	FRAME MATERIAL	FRAME JAMB FACE WIDTH	FRAME ELEVATION	FRAME TYPE	DETAILS HEAD	DETAILS JAMB	DETAILS SILL	REMARKS
300A	8'-0"	10"-0"	STL	1 3/4"	B		2 HR	STL			STL				
301A	3'-0"	7"-0"	STL	1 3/4"	A		2 HR	STL			STL				
301B	14'-0"	14"-0"	STL		C										
301C	8'-0"	10"-0"	STL		B										
301D	3'-0"	7"-0"	STL	1 3/4"	A			STL			STL				

HARDWARE SCHEDULE

OPENING NUMBER	FUNCTION	SUSPENSION	LOCKSET	PANIC DEVICE	ASTRAGAL	CLOSER	STOP	EMERGENCY EGRESS HARDWARE	COORDINATOR	3PR BUTTS	PUSH/PULL	ELECTRIC STRIKE	WEATHER-STRIPPING	STAINLESS THRESHOLD	REMARKS
	⊗														MOTOR OPERATED , 120V
			⊗	⊗		⊗	⊗			⊗			⊗		ACCESS CONTROL
	⊗														MOTOR OPERATED , 120V
	⊗														MOTOR OPERATED , 120V
			⊗	⊗		⊗	⊗			⊗			⊗		ACCESS CONTROL

SCHEDULE LEGEND

OPENING/DOOR	
SCW	SOLID CORE WOOD
HM	HOLLOW METAL
1/4" T	1/4" TEMPERED GLASS
FRSG	FIRE-RATED SAFETY GLASS
ALUM	ALUMINUM
HARDWARE	
PIV	PIVOT
W	WALL
OH	OVERHEAD
SS	STAINLESS STEEL
LOCKSET FUNCTIONS (ANSI)	
F01	PASSAGE
F02	PRIVACY
F04	OFFICE/ENTRANCE
F05	CLASSROOM
F07	STOREROOM

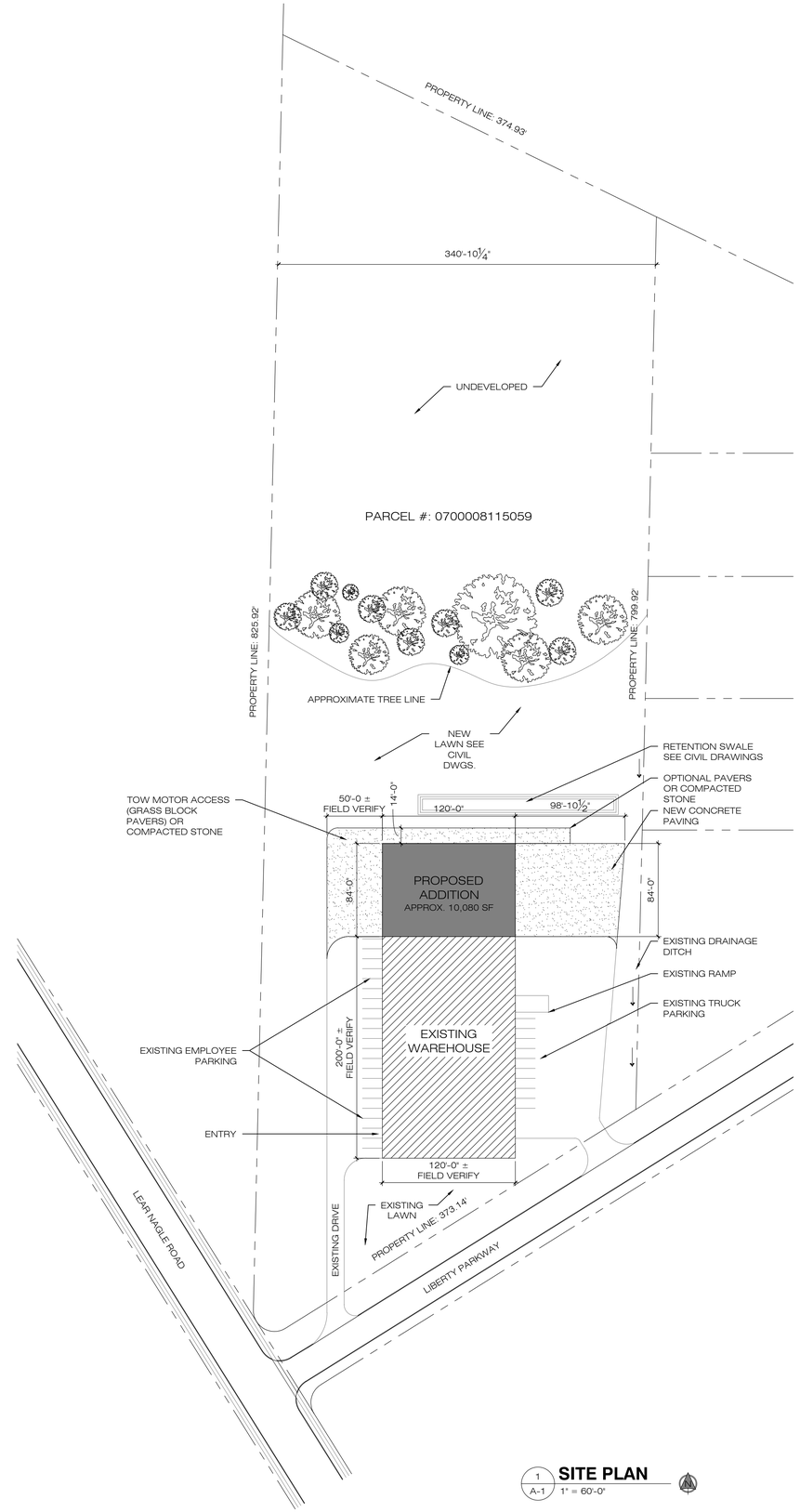

1 A-1 **SITE PLAN**
1" = 60'-0"

STATE OF OHIO
VICTOR P. KREVINKO

VICTOR P. KREVINKO
OHIO REG. NO. 11512
EXPIRATION 12.31.25

WAREHOUSE ADDITION
TJB INCORPORATED
33600 LIBERTY PARKWAY
NORTH RIDGEVILLE, OHIO 44039

ISS		PURPOSE	DATE
1		PLANNING	01-5-24
2		PERMIT	02-25-24

TITLE:

JOB NO:

DRAWING NO:

A-1

F:\USB DISK\33600 Liberty Pkwy TJB\TJB_Plans 11 02 23.dwg\A-1\May 06, 2024 - 2:54pm VKrevinko

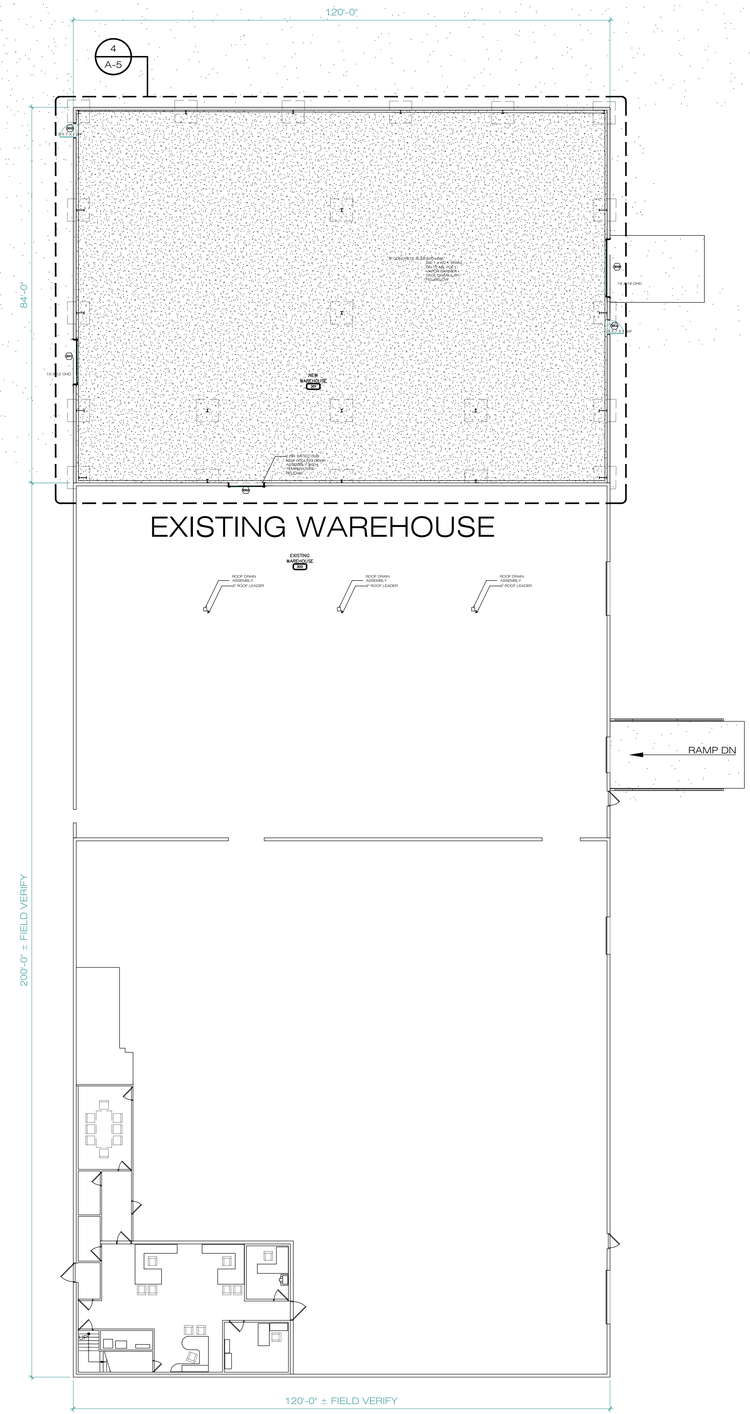

1 A-2 OVERALL **FLOOR PLAN** 1/16" = 1'-0"

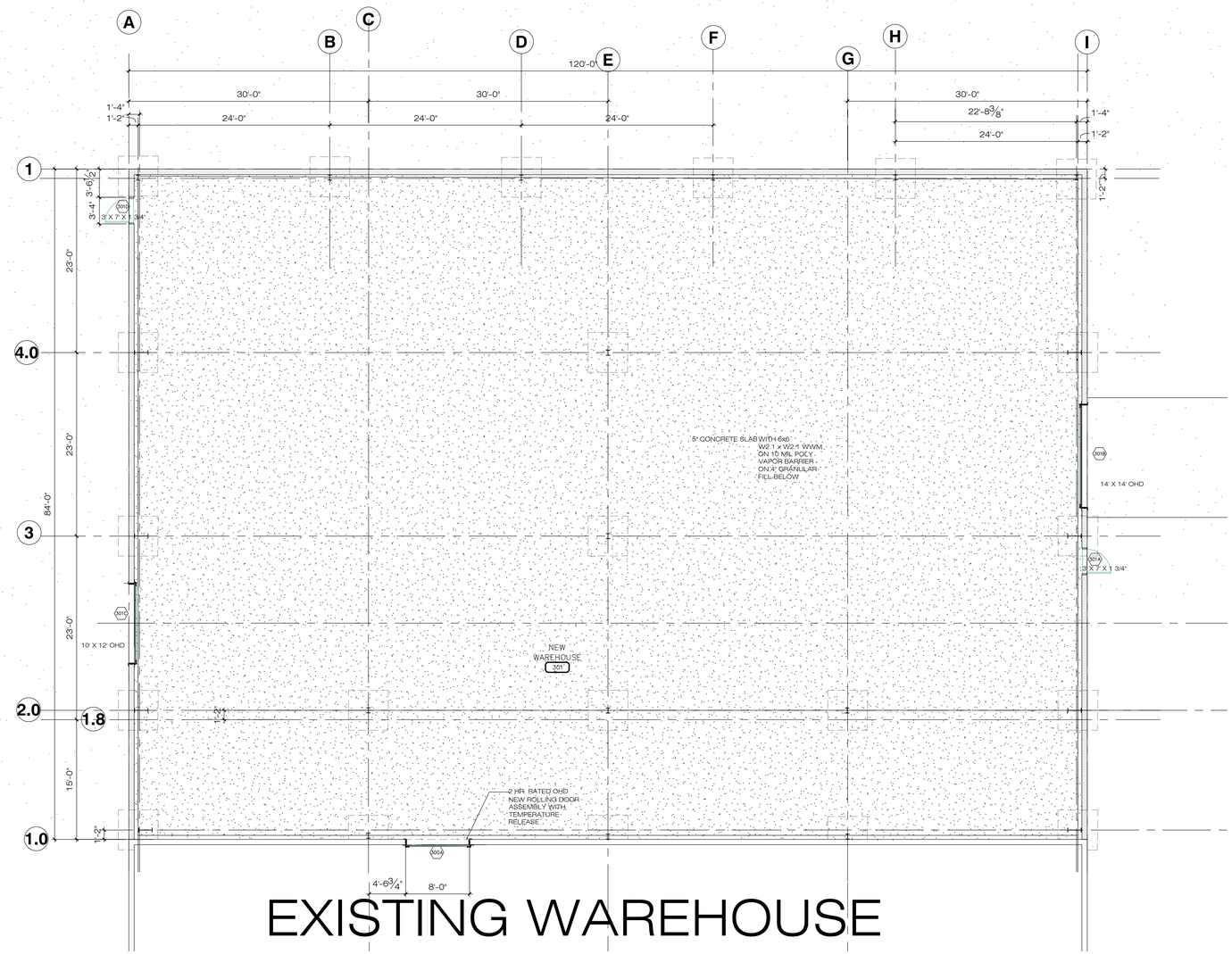

2 A-2 **CONSTRUCTION PLAN** 1/8" = 1'-0"

STATE OF OHIO
VICTOR P. KREVINKO
11512
REGISTERED ARCHITECT

VICTOR P. KREVINKO
OHIO REG. NO. 11512
EXPIRATION 12.31.25

WAREHOUSE ADDITION
TJB INCORPORATED
33600 LIBERTY PARKWAY
NORTH RIDGEVILLE, OHIO 44039

ISS		PURPOSE	DATE
1		PLANNING	01-05-24

TITLE:

JOB NO:

DRAWING NO:

A-2

F:\USB DISK\33600 Liberty Pky TJB\TJB_Plans 11 02 23.dwg [A-2] May 06, 2024 - 2:57pm Vkrevinko

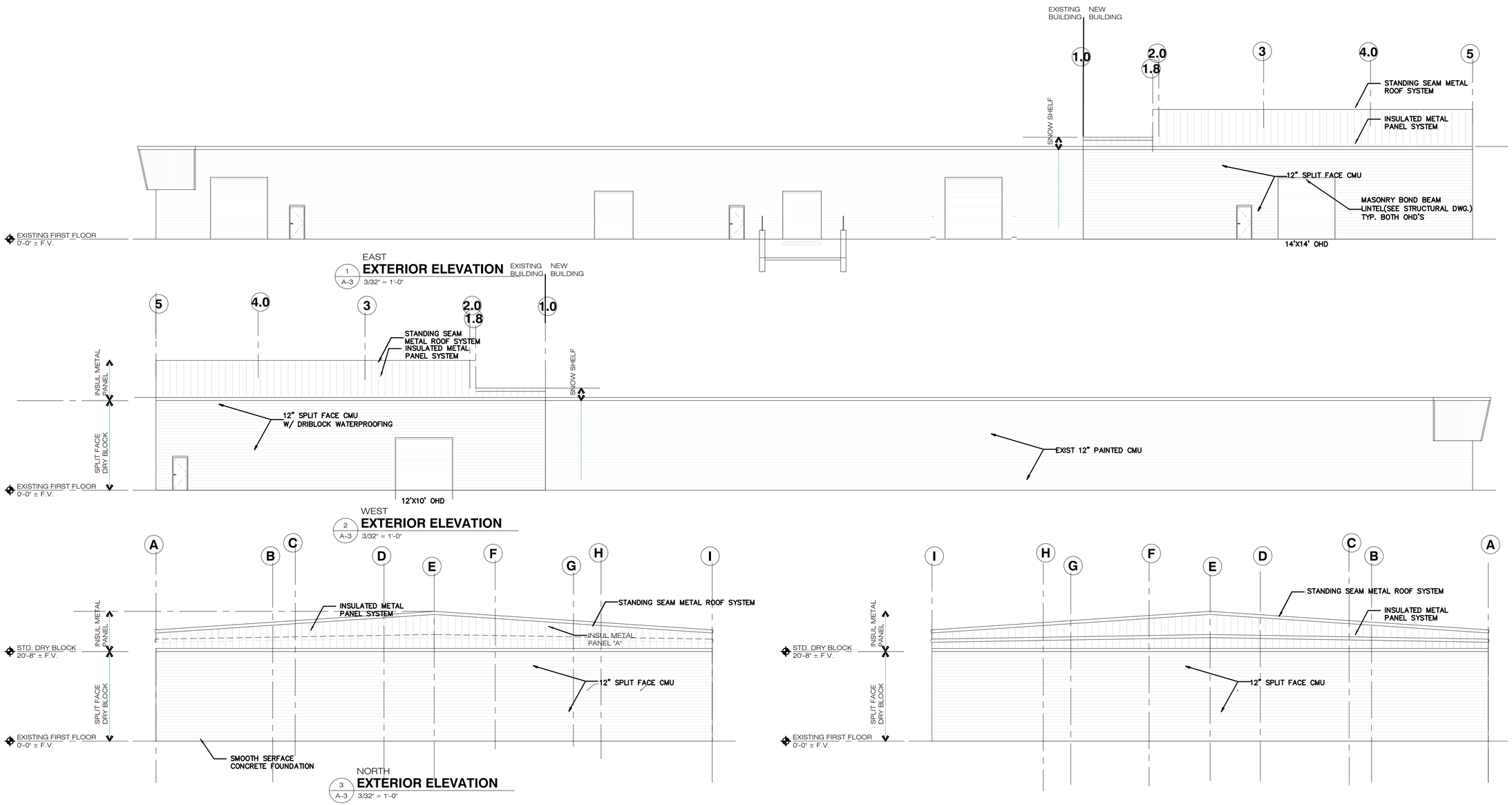

STATE OF OHIO
VICTOR P. KREVINKO
11512
REGISTERED ARCHITECT

VICTOR P. KREVINKO
OHIO REG. NO. 11512
EXPIRATION 12.31.25

WAREHOUSE ADDITION
TJB INCORPORATED
33600 LIBERTY PARKWAY
NORTH RIDGEVILLE, OHIO 44039

REV		PURPOSE	DATE
1		PLANNING	01-05-24

TITLE:

JOB NO:

DRAWING NO:

A-3

F:\USB DISK\33600 Liberty Pky TJB\TJB_Plans 11 02 23.dwg [A-3] May 06, 2024 - 2:58pm Vkrevinko

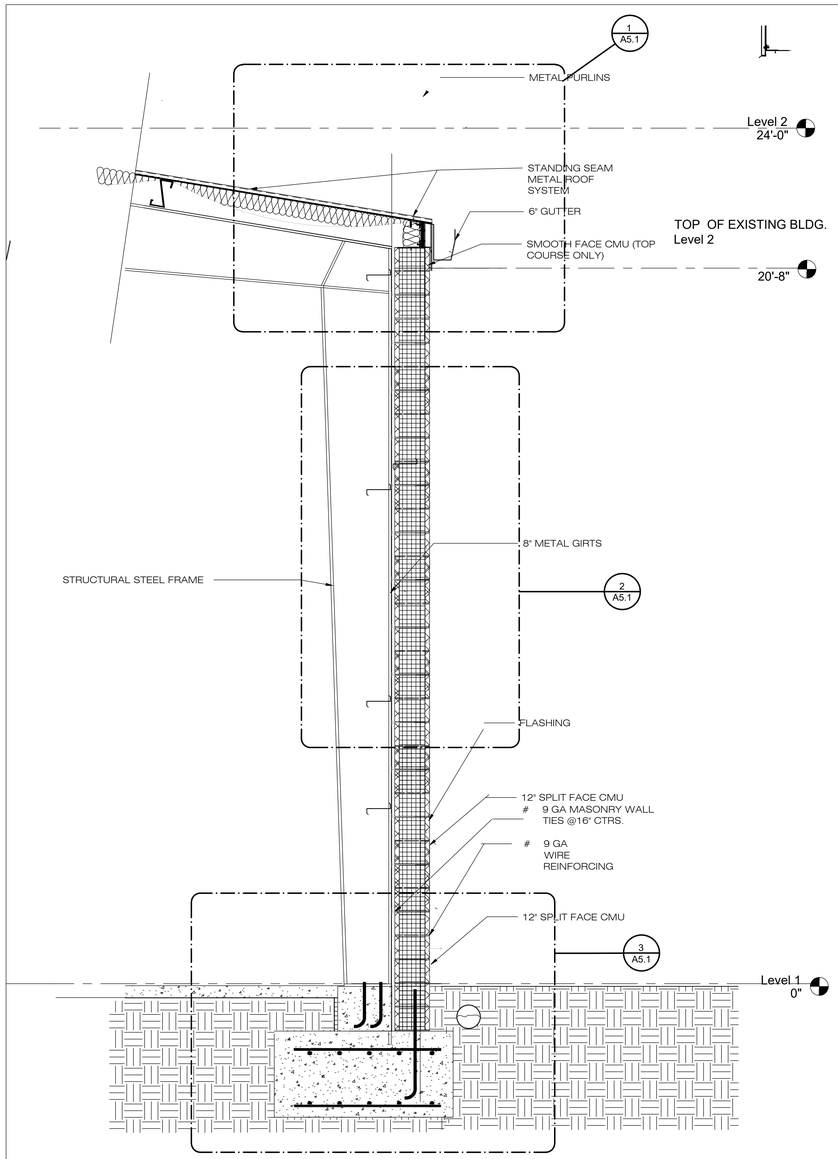

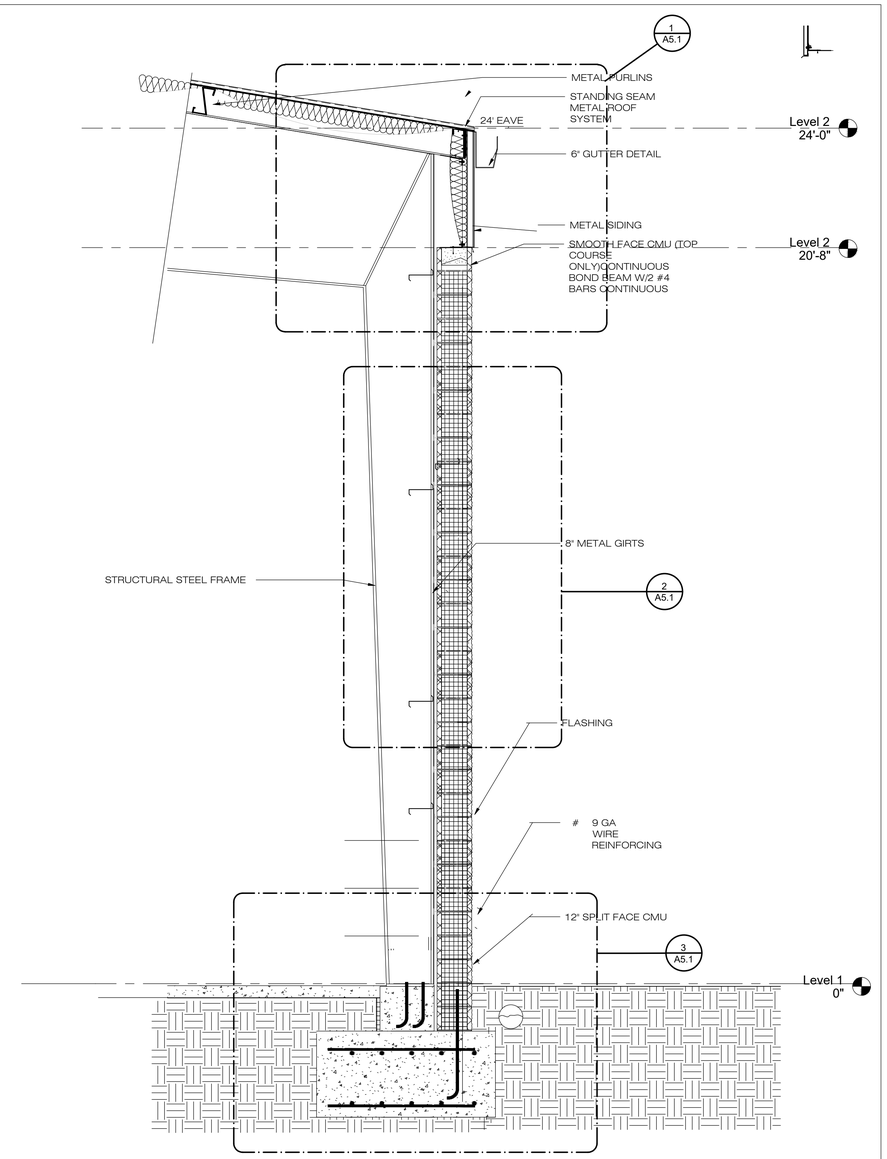

STATE OF OHIO
VICTOR P. KREVINKO
11512
REGISTERED ARCHITECT

VICTOR P. KREVINKO
OHIO REG. NO. 11512
EXPIRATION 12.31.25

1
WAREHOUSE ADDITION
TJB INCORPORATED
33600 LIBERTY PARKWAY
NORTH RIDGEVILLE, OHIO 44039

ISS		PURPOSE	DATE
1		PLANNING	01-05-24

TITLE:

JOB NO:

DRAWING NO:

A-4

P:\USB DISK\33600 Liberty Pkwy 1 (B)\1-tjb_Plans 11 02 23.dwg [A-4] May 06, 2024 - 2:59pm Vkrevinko

SUBMITTALS

SUBMIT PRODUCT DATA TO SHOW LIST OF ITEMS PROPOSED TO BE PROVIDED INCLUDING BUT NOT LIMITED TO: MANUFACTURER'S SPECIFICATIONS AND OTHER DATA NEEDED TO PROVE COMPLIANCE WITH THE SPECIFIED REQUIREMENTS; MANUFACTURER'S RECOMMENDED INSTALLATION PROCEDURES WHICH, WHEN APPROVED BY THE ARCHITECT, WILL BECOME THE BASIS FOR ACCEPTING OR REJECTING THE ACTUAL INSTALLATION PROCEDURES USED ON THE WORK; SHOP DRAWINGS SHOWING FIT, LAYOUT AND CONSTRUCTION.

SUBMITTALS FOR ALL DIVISION 9 PRODUCTS SHALL INCLUDE MSDS SHEETS AND ALL PERTINENT DATA DENOTING FLAME SPREAD AND SMOKE DEVELOPED RATINGS PER ASTM E84.

02 41 19 - SELECTIVE DEMOLITION

WORK INCLUDES SELECTIVE DEMOLITION AS INDICATED ON THE DRAWINGS. THIS WORK INCLUDES CUTTING AND PATCHING REQUIRED BY THE VARIOUS TRADES FOR THEIR WORK.

EXAMINE WORK TO BE PERFORMED AND CORRECT CONDITIONS DETRIMENTAL TO THE PROPER AND SAFE COMPLETION OF THE WORK. DO NOT PROCEED UNTIL UNSATISFACTORY CONDITIONS ARE CORRECTED. WORK SHALL BE DONE BY SKILLED WORKMEN WHO ARE TRAINED AND EXPERIENCED IN THE NECESSARY CRAFTS. USE MEANS AND METHODS APPROPRIATE FOR THE WORK.

OWNER SHALL HAVE FIRST RIGHT OF SALVAGE OF DOORS, FRAMES, HARDWARE, OTHERWISE ALL DEMOLISHED MATERIAL SHALL BE CONSIDERED TO BE PROPERTY OF THE CONTRACTOR AND SHALL BE COMPLETELY REMOVED FROM THE JOB SITE.

SHUT OFF, CAP, DISCONNECT, OR OTHERWISE PROTECT EXISTING UTILITY LINES IN ACCORDANCE WITH APPLICABLE CODES. NOTIFY OWNER'S DESIGNATED REPRESENTATIVE 72 HOURS PRIOR TO SHUTTING OFF OR INTERRUPTION OF ANY UTILITIES.

PROVIDE MEANS NECESSARY TO CONTROL DUST AND DIRT FROM BECOMING A NUISANCE, INCLUDING BUT NOT LIMITED TO DUST PARTITIONS, RUNWAY MATS, AND WALK OFF MATS.

NOTIFY OWNER'S REPRESENTATIVE 24 HOURS PRIOR TO ANY WORK THAT WILL CREATE EXCESSIVE NOISE OR DUST.

CUTTING AND PATCHING - WORK SHALL BE DONE BY OR ARRANGED BY THE TRADE REQUIRING THE CUTTING. WORK SHALL BE PERFORMED ONLY BY SKILLED WORKMEN WHO ARE TRAINED AND EXPERIENCED IN THE NECESSARY CRAFTS. AT RATED PARTITIONS, FLOORS, AND CEILINGS, ALL PATCHING SHALL MATCH THE RATING REQUIRED FOR THAT CONSTRUCTION.

05 50 00 - METAL FABRICATIONS

PROVIDE AND INSTAL METAL FABRICATIONS AS SHOWN ON DRAWINGS, INCLUDING LINTELS.

METALS
- STEEL PLATES, SHAPES, AND BARS: ASTM A36.
- STEEL PIPE: ASTM A53, STANDARD WEIGHT (SCHEDULE 40).

LOOSE STEEL LINTELS
- FABRICATE LOOSE LINTELS TO PROVIDE BEARING LENGTH AT EACH SIDE OF OPENINGS EQUAL TO $\frac{1}{10}$ OF CLEAR SPAN, BUT NOT LESS THAN 8 INCHES UNLESS OTHERWISE INDICATED.

LOOSE LINTEL SCHEDULE
- THE FOLLOWING SCHEDULES APPLY TO ALL NON-BEARING MASONRY WALLS AND TO BEARING WALLS WHERE LINTELS ARE NOT INDICATED ON THE DRAWINGS:
- FOR 4", 8", 12" AND 16" WALLS, PROVIDE ONE ANGLE FOR EACH 4" OF MASONRY WALL THICKNESS WITH 3 1/2" LEG HORIZONTAL AS FOLLOWS:

SPAN LIMITS	ANGLE SIZE
0'-0" TO 4'-0"	L3 x 3 1/2 x 1/4
4'-1" TO 5'-6"	L4 X 3 1/2 x 5/16
5'-7" TO 7'-6"	L5 X 3 1/2 x 5/16
7'-7" TO 9'-6"	L6 X 3 1/2 x 5/16

- FOR 6" WALLS PROVIDE:

SPAN LIMITS	ANGLE SIZE
0'-0" TO 4'-0"	WT5x6
4'-1" TO 5'-6"	WT5x8.5
5'-7" TO 9'-6"	WT5x11

SHOP PRIMER
- UNIVERSAL SHOP PRIMER: FAST-CURING, LEAD- AND CHROMATE-FREE, UNIVERSAL MODIFIED-ALKYD PRIMER COMPLYING WITH MPI#79 AND COMPATIBLE WITH TOPCOAT. USE PRIMER CONTAINING PIGMENTS THAT MAKE IT EASILY DISTINGUISHABLE FROM ZINC-RICH PRIMER.

06 10 00 - ROUGH CARPENTRY

PROVIDE AND INSTALL WOOD, NAILS, BOLTS, SCREWS, FRAMING ANCHORS, ROUGH HARDWARE, AND OTHER ITEMS NEEDED FOR ROUGH CARPENTRY AND BLOCKING FOR SURFACE MOUNTED ITEMS, AS SHOWN ON THE DRAWINGS AND AS NEEDED FOR A COMPLETE AND PROPER INSTALLATION.

ALL LUMBER SHALL BE FIRE RETARDANT TREATED AS REQUIRED IN ACCORDANCE WITH OBC 2303.2, AND AS FOLLOWS:

1. FIRE-RETARDANT-TREATED LUMBER AND PLYWOOD BY PRESSURE PROCESS: PRODUCTS WITH A FLAME-SPREAD INDEX OF 25 OR LESS WHEN TESTED ACCORDING TO ASTM E84, AND WITH NO EVIDENCE OF SIGNIFICANT PROGRESSIVE COMBUSTION WHEN THE TEST IS EXTENDED AN ADDITIONAL 20 MINUTES, AND WITH THE FLAME FRONT NOT EXTENDING MORE THAN 10.5 FEET BEYOND THE CENTERLINE OF THE BURNERS AT ANY TIME DURING THE TEST.
2. TREATMENT SHALL NOT PROMOTE CORROSION OF METAL FASTENERS.
3. EXTERIOR TYPE: TREATED MATERIALS SHALL COMPLY WITH REQUIREMENTS SPECIFIED ABOVE FOR FIRE-RETARDANT-TREATED LUMBER AND PLYWOOD BY PRESSURE PROCESS AFTER BEING SUBJECTED TO ACCELERATED WEATHERING ACCORDING TO ASTM D2898. USE FOR EXTERIOR LOCATIONS AND WHERE INDICATED.
4. INTERIOR TYPE A: TREATED MATERIALS SHALL HAVE A MOISTURE CONTENT OF 28 PERCENT OR LESS WHEN TESTED ACCORDING TO ASTM D3201 AT 92 PERCENT RELATIVE HUMIDITY. USE WHERE EXTERIOR TYPE IS NOT INDICATED.
5. IDENTIFY FIRE-RETARDANT-TREATED WOOD WITH APPROPRIATE CLASSIFICATION MARKING OF QUALIFIED TESTING AGENCY.

WOOD PRESERVATIVE-TREATED MATERIALS;

1. PRESERVATIVE TREATMENT BY PRESSURE PROCESS: AWPA U1; USE CATEGORY UC2 FOR INTERIOR CONSTRUCTION NOT IN CONTACT WITH GROUND, USE CATEGORY UC3B FOR EXTERIOR CONSTRUCTION NOT IN CONTACT WITH GROUND, AND USE CATEGORY UC4A FOR ITEMS IN CONTACT WITH GROUND.
2. PRESERVATIVE CHEMICALS: ACCEPTABLE TO AUTHORITIES HAVING JURISDICTION AND CONTAINING NO ARSENIC OR CHROMIUM. DO NOT USE INORGANIC BORON (SBX) FOR SILL PLATES.]
   1. DOC PS 1, EXPOSURE 1, C-D PLUGGED IN THICKNESS INDICATED, OR, IF NOT INDICATED, NOT LESS THAN 1/2" NOMINAL THICKNESS.

FASTENERS
1. WHERE CARPENTRY IS EXPOSED TO WEATHER, IN GROUND CONTACT, OR PRESSURE-PRESERVATIVE TREATED, PROVIDE FASTENERS WITH HOT-DIP ZINC COATING COMPLYING WITH ASTM A153/A
2. NAILS, BRADS, AND STAPLES: ASTM F 1667.
3. POWER-DRIVEN FASTENERS: NES NER-272.
4. WOOD SCREWS: ASME B18.6.1.
5. SCREWS FOR FASTENING TO METAL FRAMING: ASTM C 954, EXCEPT WITH WAFER HEADS AND REAMER WINGS, LENGTH AS RECOMMENDED BY SCREW MANUFACTURER FOR MATERIAL BEING FASTENED.
6. LAG BOLTS: ASTM A 307.
7. STEEL BOLTS: ASTM A 307, GRADE A.
8. EXPANSION ANCHORS: ANCHOR BOLT AND SLEEVE ASSEMBLY WITH CAPABILITY TO SUSTAIN, WITHOUT FAILURE, A LOAD EQUAL TO 6 TIMES THE LOAD IMPOSED WHEN INSTALLED IN MASONRY ASSEMBLIES AND EQUAL TO 4 TIMES THE LOAD IMPOSED WHEN INSTALLED IN CONCRETE AS DETERMINED BY TESTING PER ASTM E 488 CONDUCTED BY A QUALIFIED INDEPENDENT TESTING AND INSPECTION AGENCY.

VERIFY ELEVATION AND ALIGNMENT OF ALL WORK. WHEN IN-FILLING EXISTING CONSTRUCTION. FIELD VERIFY AND MATCH EXISTING CONSTRUCTION. CAREFULLY SELECT MEMBERS. REJECT LUMBER WITH EXCESSIVE WARP, TWIST, BOW, OR WITH MILDEW, FUNGUS, OR MOLD. COORDINATE AND INSTALL WOOD BLOCKING AND BACKING REQUIRED FOR THE WORK OF OTHER TRADES, INCLUDING WALL CABINETS, CRASH RAILS, ETC. PROVIDE PENETRATION INTO PIECE RECEIVING POINT OF NOT LESS THAN ½ THE LENGTH OF THE NAIL OR SPIKE. FOR LAG SCREWS AND WOOD SCREWS, PRE-BORE HOLES.

07 84 13 - PENETRATION FIRESTOPPING

PACK ALL OPENINGS AROUND PIPES OR OTHER PENETRATIONS IN FIRE WALLS, FLOORS, OR CEILINGS WITH FIRE STOPPING AS MANUFACTURED BY SPECIFIED TECHNOLOGIES INC. (STI), SOMERVILLE, NJ.

[SPECIFIER NOTE: FOR CLEVELAND CLINIC AND UNIVERSITY HOSPITALS PROJECTS, ONLY SPECIFY STI ABOVE - FOR OTHER PROJECTS, INCLUDE PRODUCTS BELOW:

OTHER ACCEPTABLE PRODUCTS:

1. NELSON FIRESTOP PRODUCTS, MANUFACTURED BY NELSON THERMAL INSULATION AND FIRESTOPPING,
2. TREMCO FIRESTOPPING SYSTEMS, MANUFACTURED BY TREMCO, CLEVELAND, OHIO
3. 3M FIRE BARRIER MANUFACTURED BY 3M.

CONTRACTOR MUST PROVIDE DOCUMENTATION TO THE ARCHITECT ABOUT THE SYSTEM TO BE USED, INCLUDING SPECIFIC PRODUCTS TO BE USED, SYSTEM TEST DATA FROM A RECOGNIZED TESTING LABORATORY, AND MANUFACTURER'S RECOMMENDED INSTALLATION INSTRUCTIONS. INSTALL MATERIALS TO ACHIEVE THE REQUIRED FIRE RATING(S), FOLLOWING THE MANUFACTURER'S WRITTEN INSTALLATION INSTRUCTIONS.

07 92 00 - JOINT SEALANTS

THROUGHOUT THE WORK, SEAL JOINTS: TO PREVENT THE PASSAGE OF AIR AND WATER; TO PREVENT THE PASSAGE OF SOUND; AND BETWEEN DISSIMILAR MATERIALS.

GENERAL INTERIOR SEALANT: TREMCO ACRYLIC LATEX 834 OR EQUAL.

AT WET LOCATIONS, PROVIDE CLEAR SILICONE SEALANT EQUAL TO DOW CORNING #786 MILDEW RESISTANT

EXTERIOR VERTICAL AND NON-TRAFFIC HORIZONTAL JOINTS: TREMCO DYNAMIC

BACKER RODS: ASTM C1330, TYPE C (CLOSED-CELL MATERIAL WITH A SURFACE SKIN), TYPE O (OPEN-CELL MATERIAL),TYPE B (BICELLULAR MATERIAL WITH A SURFACE SKIN) OR ANY OF THE PRECEDING TYPES, AS APPROVED IN WRITING BY JOINT-SEALANT MANUFACTURER FOR JOINT APPLICATION INDICATED, AND OF SIZE AND DENSITY TO CONTROL SEALANT DEPTH AND OTHERWISE CONTRIBUTE TO PRODUCING OPTIMUM SEALANT PERFORMANCE.

THOROUGHLY CLEAN ALL JOINTS OF DIRT, DUST, OIL, ETC. APPLY MASKING TAPE TO ADJACENT EXPOSED SURFACES WHICH COULD BE DAMAGED BY CAULK. JOINTS IN EXCESS OF ¾" IN DEPTH SHALL RECEIVE JOINT BACK-UP MATERIAL EQUAL TO ETHAFOAM POLYETHYLENE BACKER RODS. DEPTH OF SEALANT SHALL BE NOT MORE THAN 1/2" IN DEPTH NOR LESS THAN ⅜". JOINTS SHALL BE TOOLED TO A SLIGHTLY CONCAVED SURFACE. DO NOT USE DETERGENTS OR SOAPY WATER FOR TOOLING.

08 12 13 - HOLLOW METAL DOORS AND FRAMES

HEAVY-DUTY FRAMES: SDI A250.8, LEVEL 2.

1. PHYSICAL PERFORMANCE: LEVEL B ACCORDING TO SDI A250.4.
2. MATERIALS: STEEL SHEET, MINIMUM THICKNESS OF 0.053 INCH (16 GAGE).
3. CONSTRUCTION: FULL PROFILE WELDED.
4. EXPOSED FINISH: PRIME.

STEEL DOOR AND FRAME STANDARD: COMPLY WITH ANSI A 250.8.

DOORS: SDI A250.8, LEVEL 2, 0.042 INCH THICK STEEL SHEET FACE, GALVANIZED, MODEL 2 SEAMLESS, POLYURETHANE CORE.

MANUFACTURERS:

1. AMWELD BUILDING PRODUCTS
2. CECO DOOR PRODUCTS
3. CURRIES COMPANY
4. REPUBLIC BUILDERS PRODUCTS
5. STEELCRAFT

FIRE-RATED ASSEMBLIES: ASSEMBLIES COMPLYING WITH NFPA 80 THAT ARE LISTED AND LABELED BY A QUALIFIED TESTING AGENCY ACCEPTABLE TO AUTHORITIES HAVING JURISDICTION FOR FIRE-PROTECTION RATINGS INDICATED ON DRAWINGS, BASED ON TESTING AT POSITIVE PRESSURE ACCORDING TO NFPA 252 OR UL 10C.

1. SMOKE- AND DRAFT-CONTROL ASSEMBLIES: LISTED AND LABELED FOR SMOKE

INSERTS, BOLTS AND FASTENERS: MANUFACTURER'S STANDARD UNITS.

HARDWARE PREPARATION: PREPARE FRAMES TO RECEIVE MORTISED AND CONCEALED HARDWARE ACCORDING TO FINAL DOOR HARDWARE SCHEDULE AND TEMPLATES PROVIDED BY HARDWARE SUPPLIER. COMPLY WITH APPLICABLE REQUIREMENTS IN ANSI A250.6 AND ANSI A115 SERIES FOR DOOR AND FRAME PREPARATION FOR HARDWARE.

PROVIDE WELDED FRAMES WITH TEMPORARY SPREADER BARS.

PRIME FINISH: MANUFACTURER'S STANDARD, FACTORY-APPLIED COAT OF RUST-INHIBITING PRIMER COMPLYING WITH ANSI A250.10.

INSTALL FRAMES AND DOORS IN ACCORDANCE WITH SDI 250.11. PROVIDE AT LEAST THREE WALL ANCHORS PER JAMB.

08 36 00 - SECTIONAL OVERHEAD DOORS

PROVIDE SECTIONAL OVERHEAD DOORS AS SHOWN ON DRAWINGS, AS SPECIFIED AND AS NEEDED FOR A COMPLETE AND PROPER INSTALLATION.

PROVIDE FLUSH INSULATED SECTIONAL OVERHEAD DOORS EQUAL TO WAYNE-DALTON CORP. THERMOSPAN 150 INSULATED STEEL DOORS. "U"-VALUE OF 0.087, HOT DIPPED GALVANIZED WITH BAKED ON PRIMER AND POLYESTER FINISH, COMPLETE WITH WEATHER STRIPPING, 2 INCH TRACK. TRACK TO BE "STANDARD LIFT". COORDINATE TRACK HEIGHT WITH FIELD CONDITIONS. PROVIDE TRACKS, TRACK SUPPORT FRAMING, ALL MOUNTING HARDWARE, MOUNTING TO BE CONTINUOUS ANGLE MOUNTING FOR STEEL JAMBS. OPERATOR TO BE JACK SHAFT MOUNTED MOTOR OPERATOR WITH CHAIN HOIST FOR EMERGENCY OPERATION MODEL H3311L-R (110V, MOTOR AND CHAIN HOIST ON RIGHT SLIDE OF INTERIOR OF DOOR) WITH THREE BUTTON CONTROL. PROVIDE FOR INTERIOR SIDE LOCK. DOORS SHALL BE WEATHER STRIPPED WITH JOINT SEALS AND BOTTOM "BULB" ASTRAGAL. PROVIDE DOOR BOTTOM EDGE SAFETY SENSOR TO REVERSE DOOR UPON MEETING AN OBSTRUCTION.

08 71 00 - DOOR HARDWARE

PROVIDE FINISH HARDWARE AS SPECIFIED AND NEEDED FOR A COMPLETE AND PROPER INSTALLATION.

PROVIDE THE SERVICES OF AN AHC OR DAHC HARDWARE CONSULTANT. SUBMIT A HARDWARE SCHEDULE LISTING ALL DOORS AND HARDWARE GROUPS. INCLUDING COPIES OF CUT SHEETS FOR ALL HARDWARE ITEMS PROPOSED. DELIVER TEMPLATES OF THE APPROVED FINISH HARDWARE TO PERTINENT MANUFACTURERS OF INTERFACING ITEMS SUCH AS DOORS AND FRAMES. FURNISH ALL NECESSARY SCREWS, BOLTS AND OTHER FASTENERS REQUIRED. OWNER WILL PROVIDE CORES AND KEYING.

PROVIDE FINISH HARDWARE FROM THE FOLLOWING LIST OF ACCEPTABLE PRODUCTS:

1. DOOR BUTTS HINGES - FIVE KNUCKLE BALL BEARING, MORTISED.
   A. HAGAR - BB1279

2. LOCKSET
   A. SARGENT 8200 SERIES WITH LN ROSE AND J LEVER (TO MATCH EXISTING)

1. PROVIDE LOCKSETS AND LATCHSETS IN FUNCTIONS AS SHOWN ON HARDWARE SCHEDULE.

3. WALL STOP
   A. IVES 407 US26D

4. CLOSER
   A. LCN 4040

5. AUTOMATIC FLUSH BOLTS - PAIR
   A. IVES FB61P

6. COORDINATORS
   A. IVES COR SERIES

7. PUSH / PULL
   A. IVES - 8200 6 X 16 PUSH
   B. IVES 8102 - 8 PULL

8. THRESHOLDS
   A. NATIONAL GUARD PRODUCTS OR EQUAL. STAINLESS STEEL, ADA COMPLIANT

9. WEATHER STRIPPING
   A. NATIONAL GUARD PRODUCTS OR EQUAL, NEOPREME

10. ELECTRIC STRIKE
    A. BHMA A156.31,GRADE 1 WITH FACEPLATE TO SUITE LOCK AND FRAME

FINISH IS TO MATCH BUILDING STANDARD (FIELD VERIFY). COORDINATE WITH OTHER TRADES AS NECESSARY TO ASSURE PROPER AND ADEQUATE INTERFACE.

09 22 16 - NON-STRUCTURAL METAL FRAMING

PROVIDE NON-BEARING METAL STUDS, FURRING CHANNELS, AND ACCESSORIES FOR INTERIOR PARTITIONS AS INDICATED ON THE DRAWINGS AND AS NEEDED FOR COMPLETE AND PROPER INSTALLATION.

STEEL STUDS AND TRACKS: ASTM C645.

GALVANIZED COATING: ASTM A653, G40 (Z120).

CONVENTIONAL STEEL STUDS AND TRACKS:

1. MINIMUM BASE THICKNESS: 0.0329 INCH THICK (20 GAGE).
2. DEPTH: AS INDICATED ON DRAWINGS.

EMBOSSED, HIGH STRENGTH STEEL STUDS AND TRACKS: ROLL-FORMED AND EMBOSSES WITH SURFACE DEFORMATIONS TO STIFFEN THE FRAMING MEMBERS SO

PROVIDE ALL ACCESSORIES INCLUDING TRACKS, CLIPS, ANCHORS, AND FASTENERS. INSTALL STUDS AT SPACING LISTED ON DRAWINGS. INSTALL STUDS AND ACCESSORIES IN STRICT ACCORDANCE WITH THE MANUFACTURERS RECOMMENDATIONS, ANCHORING ALL COMPONENTS FIRMLY INTO POSITION.

ALIGN PARTITIONS TO A TOLERANCE OF ONE IN 200 HORIZONTALLY AND ONE IN 500 VERTICALLY. COORDINATE REQUIRED BACKING AND SUPPORT FOR ITEMS TO BE MOUNTED ON FINISHED COVERING.

VICTOR P. KREVINKO
OHIO REG. NO. 11512
EXPIRATION 12.31.25

WAREHOUSE ADDITION
TJB INCORPORATED
33600 LIBERTY PARKWAY
NORTH RIDGEVILLE, OHIO 44039

ISS		PURPOSE	DATE
1		PLANNING	01-05-24

TITLE:
ARCHITECTURAL SPECIFICATIONS

JOB NO:

DRAWING NO:
A-.5.0

F:\USB DISK\33600 Liberty Pky TJB\TJB_Plans 11 02 23.dwg [A-5.0] May 06, 2024 - 3:02pm VKrevinko

TWX3 LED

LED Wall Luminaire

Catalog Number

Notes

Type

Hit the Tab key or mouse over the page to see all interactive elements.

Specifications

Depth:	5.0"
Height:	14.0"
Width:	18.0"
Weight: (without options)	21 lbs

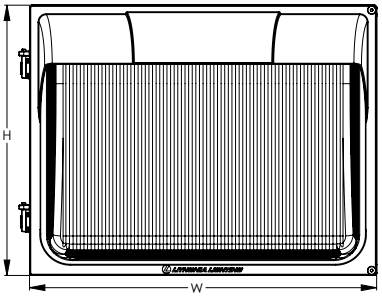

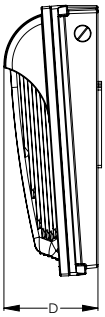

Introduction

TWX LED wall pack family, a ground-up design that has the low initial cost customers demand while providing superior performance and a traditional form. The TWX3 LED is energy efficient, saving up to 84% in energy costs when replacing a metal halide luminaire. Offering an expected service life of more than 20 years, the TWX3 LED eliminates frequent lamp and ballast replacements associated with traditional technologies.

The Adjustable Light Output (ALO) feature allows the contractor to set the light output during installation, to a level perfectly suited for the job site. The TWX3 LED ALO luminaires can replace anything from a 100W to 400W metal halide luminaire.

TWX LED Family Overview

Luminaire	Voltage	Photocell	Lumens (4000K)			
			P1	P2	P3	P4
TWX1 LED	MVOLT (120-277V)	YES	1,600	2,950	--	--
TWX2 LED	MVOLT (120-277V), 347V, 480V	YES	3,250	4,400	5,250	6,850
TWX3 LED	MVOLT (120-277V), 347V	YES	8,800	10,650	12,900	13,850

Ordering Information

EXAMPLE: TWX3 LED ALO 40K MVOLT DDBXD

Series	Package	Color Temperature	Voltage	Options	Finish	
TWX3 LED	P1 8,800 lumens P2 10,650 lumens P3 12,900 lumens P4 13,850 lumens ALO 2,900 - 13,850 lumens	30K 3000K 40K 4000K 50K 5000K	MVOLT (120-277V) 347	PE Photocell, Button Type	DDBXD Dark bronze DBLXD Black DWHXD White DNAXD Natural aluminum	DDBTXD Textured dark bronze DBLBXD Textured black DWHGXD Textured White DNATXD Textured natural aluminum

Accessories

*543982 RK1 PEB SHLD U Button style photocell shield

FEATURES & SPECIFICATIONS

INTENDED USE
The TWX3 LED is an energy-efficient, low maintenance LED wall pack for replacing up to a 400W MH fixture, providing the same footprint on the wall. TWX3 is ideal for higher mounting height applications such as industrial buildings, warehouses and schools.

CONSTRUCTION
Two-piece die-cast aluminum housing to optimize thermal management through conductive and convective cooling. The door is hinged on the side and can be removed for easy installation. The housing is completely sealed against moisture and environmental contaminants (IP65) and is suitable for the hose-down applications.

FINISH
Exterior painted parts are protected by a zinc-infused Super Durable TGIC thermoset powder coat finish that provides superior resistance to corrosion and weathering. A tightly controlled multi-stage process ensures a 3 mils thickness for a finish that can withstand extreme climate changes without cracking or peeling.

OPTICS
The advanced optical design uses both reflector and refractor technologies that work together to create superior illumination and further throw, getting the light where it is needed. The US-made borosilicate glass refractor is specifically designed to maximize light extraction and create a fully luminous luminaire for a better nighttime look.

ELECTRICAL
Light engine consists of high-efficacy LEDs mounted to housing to maximize heat dissipation and promote long-life (up to L81/100,000 hours at 25°C). The electronic driver has a power factor of >90%, THD <20%.

INSTALLATION
Designed for wall mounting above four feet from the ground. Housing is configured for mounting directly over a standard junction box (by others) or for surface wiring via any of three 1/2" threaded entry hubs.

LISTINGS
CSA certified to U.S. and Canadian standards. IP65 rated for outdoor applications. Rated for -40°C minimum ambient.
DesignLights Consortium® (DLC) qualified product. Not all versions of this product may be DLC qualified. Please check the DLC Qualified Products List at www.designlights.org/QPL to confirm which versions are qualified.

WARRANTY
5-year limited warranty. This is the only warranty provided and no other statements in this specification sheet create any warranty of any kind. All other express and implied warranties are disclaimed. Complete warranty terms located at:
www.acuitybrands.com/support/warranty/terms-and-conditions

Note: Actual performance may differ as a result of end-user environment and application. All values are design or typical values, measured under laboratory conditions at 25 °C. Specifications subject to change without notice.

© 2020-2022 Acuity Brands Lighting, Inc. All rights reserved.

Performance Data

Lumen Output

Lumen values are from photometric tests performed in accordance with IESNA LM-79-08. Data is considered to be representative of the configurations shown, within the tolerances allowed by Lighting Facts. Contact factory for performance data on any configurations not shown here.

Performance Package	System Watts	30K (3000K, 80 CRI)		40K (4000K, 80 CRI)		50K (5000K, 80 CRI)	
		Lumens	LPW	Lumens	LPW	Lumens	LPW
P1	65W	8,450	130	8,800	135	8,800	135
P2	79W	10,200	129	10,650	135	10,650	135
P3	97W	12,300	127	12,900	133	12,900	133
P4/ALO	108W	13,250	123	13,850	128	13,850	128

Electrical Load

Performance Package	System Watts	Current (A)				
		120V	208V	240V	277V	347V
P1	65W	0.538	0.310	0.269	0.233	0.186
P2	79W	0.656	0.379	0.328	0.284	0.227
P3	97W	0.806	0.465	0.403	0.349	0.279
P4/ALO	108W	0.900	0.519	0.450	0.390	0.311

Adjustable Lumen Output (ALO) Table

Setting	System Watts	Lumen Output	Replaces Metal Halide
8*	108W	13,850	400W
7	102W	13,250	
6	85W	11,400	
5	71W	9,900	
4	57W	8,200	250W
3	44W	6,450	
2	29W	4,500	150/175W
1	18W	2,900	100W

* Factory default setting is #8

Lumen Ambient Temperature (LAT) Multipliers

Use these factors to determine relative lumen output for average ambient temperatures from 0-40°C (32-104°F).

Ambient		Lumen Multiplier
0°C	32°F	1.04
10°C	50°F	1.03
20°C	68°F	1.01
25°C	77°F	1.00
30°C	86°F	0.99
40°C	104°F	0.97

Projected LED Lumen Maintenance

Data references the extrapolated performance projections for the platforms noted in a 25°C ambient, based on 10,000 hours of LED testing (tested per IESNA LM-80-08 and projected per IESNA TM-21-11).

To calculate LLF, use the lumen maintenance factor that corresponds to the desired number of operating hours below. For other lumen maintenance values, contact factory.

Operating Hours	0	25,000	50,000	60,000	100,000
Lumen Maintenance Factor	1.0	>0.95	>0.90	>0.88	>0.81

Photometric Diagrams

To see complete photometric reports or download .ies files for this product, visit the Lithonia Lighting TWX LED homepage. Tested in accordance with IESNA LM-79 and LM-80 standards

LEGEND

- 0.25 fc
- 0.5 fc
- 1.0 fc
- 3.0 fc

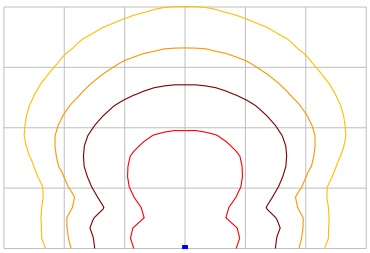

TWX3 LED ALO

MH = 18ft
Grid = 18ft x 18ft
ISO lines = 0.25fc, 0.5fc, 1.0fc, 3.0fc

© 2020-2022 Acuity Brands Lighting, Inc. All rights reserved.

DESIGN CRITERIA

Building Code:	IBC 2015
Local Code (State/Prov):	OBC 2017
Dead Load (psf):	2.250
Collateral Load (psf):	3.00
Roof Live Load (psf):	20.00
Frame Live Load (psf):	12.00

Snow:

Ground Snow Load (psf):	30.00
Snow Importance:	1.00
Thermal Coefficient:	1.00
Snow Exposure Factor:	1.00
Slippery Roof:	Y
Roof Snow Load (psf):	21
Snow Drift:	28.2psf & 12.6ft

Wind:

Ultimate Wind Speed (mph):	115 mph
Occupancy Category:	II
Importance Wind:	N/A
Wind Exposure:	C
Enclosure Classification:	C

Seismic:

Seismic Importance:	1.00
Occupancy Category:	II
Site Class:	D
Seismic Design Category:	B
Mapped Spectral Acceleration for Short Period, Ss	0.1430
Mapped Spectral Acceleration for Period of 1s, S1	0.0550

TJB Manufacturing
33600 Liberty Parkway
North Ridgeville, OH 44039

Project # C2203

CUSTOMER:

Makena Construction
104 Flat Rock Road
Bellevue, OH 44811

☒ FOR PERMIT:
THESE DRAWINGS, BEING FOR PERMIT, ARE BY DEFINITION NOT FINAL. ONLY DRAWINGS ISSUED "FOR CONSTRUCTION" CAN BE CONSIDERED AS COMPLETE.

☐ FOR CONSTRUCTION:
FINAL DRAWINGS.

ICS

Iron City Structures, LLC
6731 Surlyn Court
Loveland, OH 45140
www.ironcitystructures.com

Engineer: DAZ Approved: DAZ	Date: 11/09/23
Drafter: DAZ	Date: 11/09/23
Detailer:	Date:
Checker:	Date:

REVISION #	DATE

STATE OF OHIO
DAVID ZUSINAS
E-81232
REGISTERED PROFESSIONAL ENGINEER
11/09/2023
PROFESSIONAL ENGINEER

INDEX OF DRAWINGS

Page	Drawing Title
	Cover Page
1	Specifications
2	Anchor Bolt Plan
3	Base Plate Reactions Bldg. A
4	Base Plate Reactions Bldg. B
5	Base Plate Details
6	Rigid Frame F.L. 1
7	Rigid Frame F.L. 2
8	Rigid Frames F.L. 3 & 4
9	Sidewall Framing & Sheeting F.L. A
10	Sidewall Framing & Sheeting F.L. I
11	Endwall Framing & Sheeting F.L. 1
12	Endwall Framing & Sheeting F.L. 1.8
13	Endwall Framing & Sheeting F.L. 5
14	Roof Framing Plan
15	Roof Sheeting Plan
16	Details
17	Details
18	Details

GENERAL

All materials included in the Metal Building System are in accordance with the manufacturer's standard materials and details unless otherwise specified on the order documents. (MBMA 2018 Metal Building Systems Manual, Part IV, Section 2.1)

DESIGN RESPONSIBILITY

The manufacturer is responsible only for the structural design of the Metal Building System it sells to the purchaser / customer. Neither the manufacturer nor the manufacturer's engineer is the design professional or engineer of record for the construction project. The manufacturer is not responsible for the design of any component or materials not sold by it, or their interface and connection with Metal Building System unless such design responsibility is specifically required by the order documents. (MBMA 2018 Metal Building Systems Manual, Part IV, Section 3.1)

FOUNDATION DESIGN AND ANCHOR BOLTS

The manufacturer is not responsible for the design, materials, and workmanship of the foundation. The anchor bolt plans prepared by the manufacturer are intended to show only the anchor bolt location, diameter (based on ASTM A36 bolts), and quantity required to connect the Metal Building System to the foundation. (MBMA 2018 Metal Building Systems Manual, Part IV, Section 3.2.2).
It is the responsibility of the end customer to ensure that adequate provisions are made for specifying bolt embedment, bearing angles, tie rods, and / or associated items embedded in the concrete foundation, as well as foundation design based on the loads imposed by the Metal Building System, or other imposed loads, and the bearing capacity of the soil and other conditions of the building site. (MBMA 2018 Metal Building Systems Manual, Part IV, Section 3.2.2)
U.S. –Anchor bolts shall be accurately set to a tolerance of +/– 1/8 in both elevation and location (AISC Code of Standard Practice for Steel Buildings and Bridges, 14th Edition).
Canada –Anchor bolts shall be accurately set in accordance with CISC Code of Standard Practice, June 2008, Clause 7.7.1

ADJACENT EXISTING BUILDINGS

The manufacturer does not investigate the influence of the Metal Building System on adjacent existing buildings or structures. The end customer assures that such buildings and structures are adequate to resist snow loads or other conditions as a result of the presence of the Metal Building System. (MBMA 2018 Metal Building Systems Manual, Part IV, Section 3.2.5)

SHOP-PRIMED STEEL

All structural members of the Metal Building System not fabricated of corrosion resistant material or protected by corrosion resistant coating are painted with one coat of shop primer. All surfaces to receive shop primer are cleaned of loose rust, loose mill scale and other foreign matter by using, as a minimum the hand tool cleaning method SSPC–SP2 (Steel Manual, Structures Painting Council) prior to painting. The coat of shop primer is intended to protect the steel framing for only a short period of exposure to ordinary atmospheric conditions. Shop–primed steel should be placed on blocking to prevent contact with the ground, and so positioned as to minimize water holding pockets, dust, mud an other contamination of the primer film. Repairs of damage to primed surfaces and or removal of foreign material due to improper field storage or site conditions are not the responsibility of the manufacturer. (CISC Code of Standard Practice, June 2008, Clause 6.8; (MBMA 2018 Metal Building Systems Manual, Part IV, Section 4.2.4).

ERECTION-GENERAL

The erector, by entering into contract to erect the building, holds itself out as skilled in the erection of Metal Building Systems and is responsible for complying with all applicable local, federal, and state construction and safety regulations including OSHA regulations as well as any applicable requirements of local, national, or international union rules or practices. (CISC Code of Standard Practice, June 2008, Clause 7.2; (MBMA 2018 Metal Building System Manual, Part IV, Section 6.9).

The erector shall erect the Metal Building System in accordance with the erection drawings, the Erection and Detail Manual (February 2012), and / or the Seam–Lok Technical – Erection manual (May 2012) as furnished by the manufacturer. The aforementioned erection information is intended to illustrate the layout of the framing members, provide the associated connection details, and suggests sequence of erection. It is not intended to specify any particular method of erection to be followed by the erector. The erector remains solely responsible for the safety and appropriateness of all techniques and methods utilized by its crews in the erection of the Metal Building System. The erector is responsible for supplying any safety devices such as scaffolds, runways, nets, et, which may be required to safely erect the Metal Building System. (MBMA 2018 Metal Building Systems Manual, Part IV, Section 6.9) The manufacturer expressly disclaims any responsibility for injury to persons in the course of erection or for damages to the product itself. Field erection of a Pre–Engineered Metal Building, as in all construction projects, involves hazards to persons within the area of the construction and risk of damage to the property itself. Only experienced persons who are skilled and qualified in the erection of Metal Building Systems should be permitted to field–erect a building due to the hazards of this construction activity. The manufacturer is not responsible for the erection of the Metal Building System, the supply of any tools or equipment, or any other field work. The manufacturer provides no field supervision for the erection of the structure nor does the manufacturer perform any intermediate or final inspections of the Metal Building System during or after erection.

The erector shall furnish temporary guys and bracing where needed for squaring, plumbing, and securing the structural framing against loads, such as wind loads acting on the exposed framing as well as loads due to erection equipment and erection operation, but not including loads resulting from the performance of work by others. Bracing furnished by the manufacturer for the Metal Building System cannot be assumed to be adequate during erection. Temporary supports such as temporary guys, braces, false work, cribbing, or other elements required for the erection operation will be determined, erected, and installed by the erector. (AISC Code of Standard Practice for Steel Buildings and Bridges, 14th Edition, Section 7.10.3; CISC Code of Standard Practices, June, 2008, Clause 1.5; MBMA 2018 Metal Buildings System Manual, Part IV, Section 6.2.1.5).

ERECTION TOLERANCES

U.S. ; Erection tolerances are those set forth in AISC code of standard practice except individual members are considered, plumb, level and aligned if the deviation does not exceed 1:500. (AISC Code of Standard Practice for Steel Buildings and Bridges 14th Edition Section 7.13.1; MBMA 2018 Metal Building Systems Manual, Part IV, Section 6.8)

Canada; Erection tolerances are those set forth in CISC Code of Standard Practice except individual members are considered plumb, level and aligned if the deviation does not exceed 1:500. (CISC Handbook of Steel Construction, Tenth Edition, Second Revised Printing, Part 1, Clause 29.3; MBMA 2018 Metal Building Systems Manual, Part IV, Section 6.8)

BOLT TIGHTENING

The proper tightening and inspection of all fasteners is the responsibility of the erector (Reference RCSC for structural joints using high strength bolts; December 31, 2009). All high strength (ASTM F3125, A325, A490) bolts and nuts must be tightened by the "Snug–Tight" method unless otherwise specified by the end customer in the contract documents. Inspection of high strength bolt and nut installation by other than the erector must also be specified in the contract documents and the erector is responsible for ensuring that the installation procedures are compatible prior to the start of erection (CISC Handbook of Steel Construction, Tenth Edition, Second Revised Printing, Part 1, Clause 23.8.2), (MBMA 2018 Metal Building Systems Manual, Part IV, Section 6.9).

MATERIALS	ASTM DESIGNATION	MINIMUM YIELD	MATERIALS	ASTM DESIGNATION	MINIMUM YIELD
Hot–Rolled Mill Sections	A 36, A 572, A 992	Fy = 36 ksi and/or 50 ksi	Roof and Wall Sheeting	A 792, Gr. 50 Class 1 A 792, Gr. 80	Fy = 50 ksi Fy = 80 ksi
Structural Steel Plates	A 572, A 1011	Fy = 55 ksi	Mild Steel Bolts	A 307	Fy = 36 ksi
Structural Steel Bars	A 572 or A 529	Fy = 55 ksi	High Strength Bolts	F3125: A 325–N A 490–N	Fy = 92 or 81 ksi N/A
Cold Formed Light Gauge Shapes	A 653 Gr. 55	Fy = 55 ksi	Anchor Rods (If supplied)	A 36	Fy = 36 ksi
Cable Bracing	A 475, EHS	N/A	Pipe and Hollow Structural Sections	A 500 Gr. B	Fy = 42 ksi, 46 ksi
Rod Bracing	A 36	Fy = 36 ksi			

CORRECTION OF ERRORS AND REPAIRS

The correction of minor misfits by the use of drift pins to draw the components into line, shimming, moderate amounts of reaming, chipping, and cutting, and the replacement of minor shortages of material are a normal part of erection and are not subject to claim. (AISC Code of Standard Practice for Steel Buildings and Bridges, 14th Edition, Section 7.14; CISC Code of Standard Practice, June 2008, Clause 7.15; MBMA 2018 Metal Building Systems Manual, Part IV, Section 6.10).

DRAWING DISCREPANCIES

In case of discrepancies between the manufacturers steel plans and plans for other trades, the manufacturers steel plans govern. (AISC Code of Standard Practice for Steel Buildings and Bridges, 14th Edition, Section 3.3; CISC Code of Standard Practice, June 2008, Clause 3.4; MBMA 2018 Metal Building Systems Manual, Part IV, Section 3.1).

DELIVERIES

Delivery of any material by the manufacturers carrier, a common carrier, or to purchasers/ customers own leased, chartered, or authorized conveyance shall constitute delivery to builder, and thereafter, such material shall be at builders risk. If builder chooses to use its own, or private carrier, it shall be solely responsible for compliance with all applicable government regulations. All charges shall be borne by the builder. The manufacturers responsibility for damage or loss ceases upon delivery of shipment to carrier. The manufacturer will endeavor to deliver on the required date. The manufacturers truck is not considered as being late if deliveries are between 8am – 12pm (morning) and 12pm – 5pm (afternoon). However, the manufacturer cannot be held responsible for circumstances beyond our control. For deliveries via the manufacturers truck, the manufacturer will only honor claims that were approved by the customer service department at the time of delivery. For deliveries via contract carriers, it is the responsibility of the customer to file claims with the carrier. The manufacturer cannot assume any liability for the claim.

SHORTAGES

The purchaser /customer should make an inspection upon arrival of all building components. The purchaser/customer must note on the freight bill any missing item(s) and notify the manufacturers customer service department immediately; otherwise, the manufacturer cannot be held responsible for any shortages. If any item is damaged, note on the bill of lading and file a claim with the freight agent. Concealed shortages must be reported to the manufacturers customer service department within the following time frames (date from receipt of first delivery), based on the project shipment size, i.e., number of truck loads used in delivery.

1 to 3 loads...2 weeks 4 loads and over...3 weeks The manufacturers responsibility for shortages expires at the end of these time periods.

FABRICATION ERRORS

The purchaser/customer is responsible for contacting the customer service department to advise the manufacturer of fabrication problems and corresponding cost estimates. The manufacturer will be responsible for providing the builder with verbal approval to proceed with appropriate field corrections. This will be done in a timely manner. IF THE BUILDER PROCEEDS WITH CORRECTIVE WORK WITHOUT THE MANUFACTURERS APPROVAL, HE DOES SO AT HIS OWN RISK. The manufacturer shall not be responsible for any claims where the purchaser/customer has not documented the problem, its correction, and reasonable costs for repair, and submitted this documentation for payment within 30 days of the occurrence.

INVOICE PAYMENT

By acceptance of the materials of services set forth in the invoice, the purchaser/customer agrees to pay the invoice amount within the time period specified on the invoice. AT NO TIME IS IT ACCEPTABLE TO DEDUCT A BACK CHARGE OR SHORTAGE FROM AN INVOICE.

SAFETY PROCEDURES

The manufacturer is committed to manufacturing a quality product that can be erected safely. Although good job site practices and a commitment to safety by the erector are beyond the control of the manufacturer, the manufacturer highly recommends the erector provide good, safe working conditions on the job site. The erector should follow all local, state, and federal health and safety regulations at all times. Accident prevention practices should be implemented and each employee should know emergency procedures. The manufacturer also recommends daily meetings to discuss erection safety procedures. For additional information concerning federal health and safety regulations, contact the occupational safety and health administration (osha).

U.S. Department of Labor
Occupational Safety and Health Administration
200 Constitution Avenue, N.W.
Washington, DC 20210
www.osha.gov

The manufacturer shall not be responsible for personal injury or property damage as a result of failure to follow all applicable safety regulations and material handling and installation recommendations.

Iron City Structures, LLC
6731 Surlyn Court
Loveland, OH 45140

Engineer: DAZ Approved: DAZ	Date: 11/09/23
Drafter: DAZ	Date: 11/09/23
Detailer:	Date:
Checker:	Date:

☒ FOR PERMIT: THESE DRAWINGS, BEING FOR PERMIT, ARE BY DEFINITION, NOT FINAL, ONLY DRAWINGS ISSUED "FOR CONSTRUCTION" CAN BE CONSIDERED AS COMPLETE.

☐ FOR CONSTRUCTION: FINAL DRAWINGS.

REVISION HISTORY

REV.	DESCRIPTION	DATE

PROJECT:
TJB Manufacturing
33600 Liberty Parkway
North Ridgeville, OH 44039

CUSTOMER:
Makena Construction
104 Flat Rock Road
Bellevue, OH 44811

Project# C2203

PAGE: 1

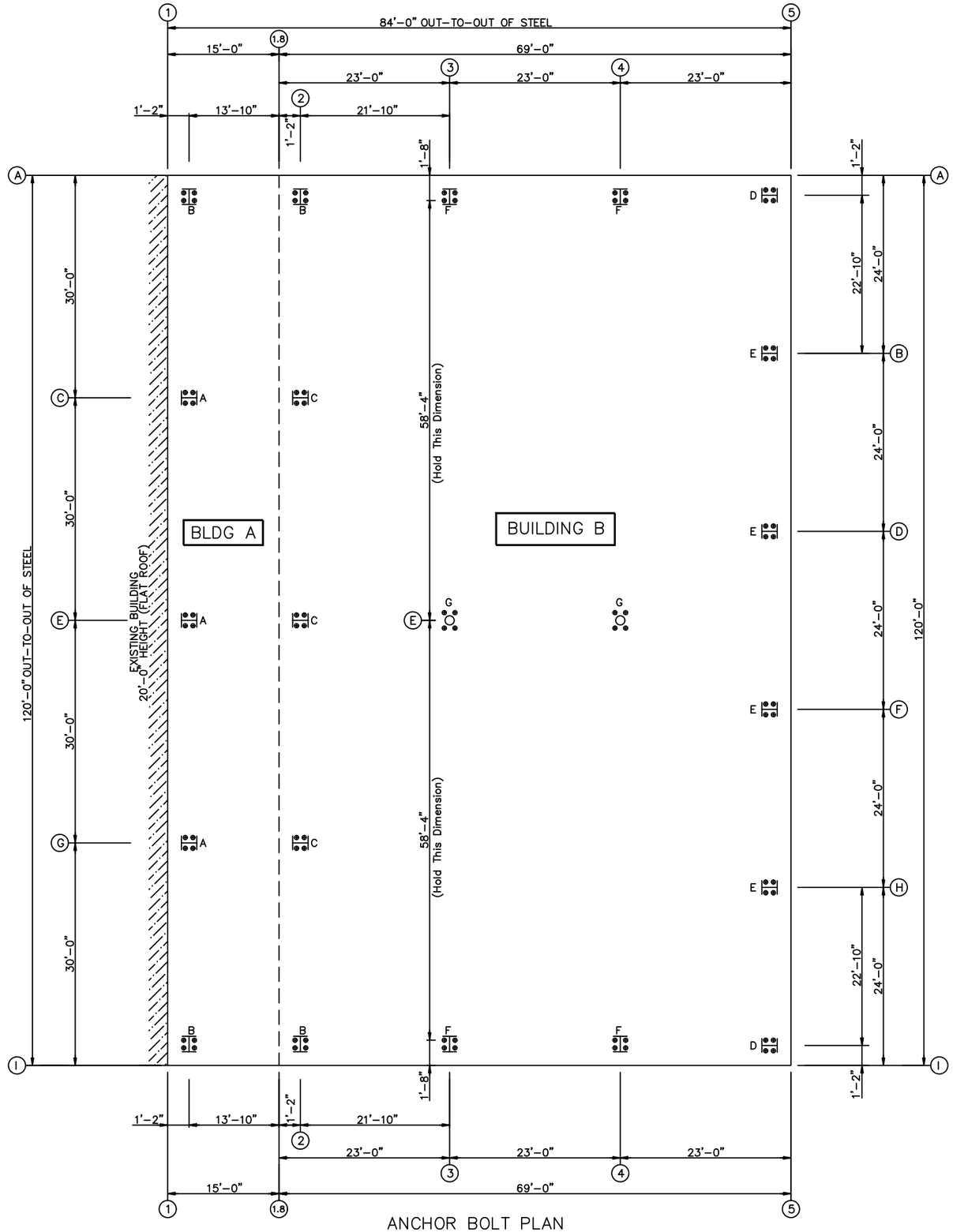

ANCHOR BOLT PLAN

NOTE: All Base Plates @ 100'-0" (U.N.)

Iron City Structures, LLC
6731 Surlyn Court
Loveland, OH 45140

Engineer: DAZ Approved: DAZ	Date: 11/09/23
Drafter: DAZ	Date: 11/09/23
Detailer:	Date:
Checker:	Date:

☒ FOR PERMIT: THESE DRAWINGS, BEING FOR PERMIT, ARE BY DEFINITION NOT FINAL. ONLY DRAWINGS ISSUED "FOR CONSTRUCTION" CAN BE CONSIDERED AS COMPLETE.

☐ FOR CONSTRUCTION: FINAL DRAWINGS.

REVISION HISTORY

REV.	DESCRIPTION	DATE

PROJECT:
TJB Manufacturing
33600 Liberty Parkway
North Ridgeville, OH 44039

CUSTOMER:
Makena Construction
104 Flat Rock Road
Bellevue, OH 44811

Project# C2203

PAGE: 2

DESIGN INFORMATION

1. All loading conditions are examined and only the maximum / minimum H or V and the corresponding H or V are reported.
2. Positive reactions are shown in the sketch. Foundation loads are in opposite directions.
3. Bracing reactions are in the plane of the brace with the H pointing away from the braced bay. The vertical reaction is downward.
4. Building reactions are based on the following building data:

DESIGN CRITERIA

Width (ft)	=120
Length (ft)	=15
Eave Height (ft)	=21.25
Roof Slope (rise/12)	=0.25:12
Building Code	=IBC 2015
Local Code (State/Prov)	=OBC 2017
Dead Load (psf)	=2.250
Collateral Load (psf)	=3.00
Roof Live Load (psf)	=20.00
Frame Live Load (psf)	=12.00
Snow:	
Ground Snow Load (psf)	=30.00
Snow Importance	=1.00
Thermal Coefficient	=1.00
Snow Exposure Factor	=1.0000
Slippery Roof	=Y
Roof Snow Load, Pf (psf)	=21
Min Roof Snow Load, Pmin (psf)	=20.00
Snow Drift Load	= 28.2psf & 12.6ft
Wind:	
Ultimate Wind Speed (mph)	=115 mph
Risk Category	=II
Importance - Wind	=N/A
Wind Exposure	=C
Enclosure Classification	=C
--Internal Pressure Coefficients--	
Pressure	=0.18
Suction	=-0.18
----Components & Cladding----	
Design Pressure:	
Pressure (psf)	=28.28
Suction (psf)	=-51.85

Equivalent Lateral Brace Force Procedure.

Steel systems not specifically detailed for seismic resistance.

SEISMIC CRITERIA

Seismic Importance	= 1.00
Risk Category	= II
Mapped Spectral Response Accelerations	
Ss	=0.1430
S1	=0.0550
---Spectral Response Coefficients---	
Sds	=0.1525
Sd1	=0.0880
Site Class	=D
Seismic Design Category	=B
------Base Shear------	
Expanded Formula	= 0.667*Ie*Fa*Ss*W/R
Longitudinal Base Shear	(k) = 1.16
Transverse Base Shear	(k) = 2.82
--Seismic Response Coefficients--	
Frame	=0.051
FSW	=
BSW	=
--Response Modification Factors--	
Frame	=3
FSW	=
BSW	=

DEFLECTION LIMITS

ENDWALL COLUMN L/ 120
ENDWALL RAFTER (Live) L/ 180
ENDWALL RAFTER (Wind) L/ 180
WALL GIRTS L/ 240
PURLIN (LIVE) L/ 180
PURLIN (WIND) L/ 180
WALL PANEL L/ 60
ROOF PANEL (Live) L/ 60
ROOF PANEL (Wind) L/ 60
Main Frame (Horiz) H/ 100
Main Frame (Vert) L/ 180
WIND BRACING H/ 100
Main Frame (Crane) H/ 100
Main Frame (Seismic) H/ 50
SEISMIC BRACING H/ 50
PARTITION COLUMN L/ 120
PARTITION GIRT L/ 120
PARTITION PANEL L/ 120

BUILDING A

FRAME LINES: 1

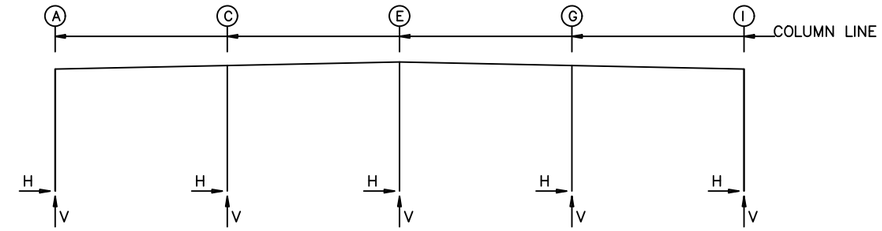

RIGID FRAME: BASIC COLUMN REACTIONS (k)

Frame Line	Column Line	Dead Horz	Dead Vert	Collateral Horz	Collateral Vert	Live Horz	Live Vert	Snow Horz	Snow Vert	Snow_Drift Horz	Snow_Drift Vert	Wind_Left1 Horz	Wind_Left1 Vert
1	A	0.1	0.8	0.1	0.4	0.2	1.5	0.4	2.7	0.1	0.8	-2.5	-4.1
1	I	-0.1	0.8	-0.1	0.4	-0.2	1.5	-0.4	2.7	-0.1	0.8	-1.6	-0.6
1	C	0.0	1.5	0.0	0.8	0.0	3.3	0.0	5.8	0.0	1.6	0.0	-3.9
1	E	0.0	1.5	0.0	0.8	0.0	3.2	0.0	5.6	0.0	1.6	0.0	-2.9
1	G	0.0	1.5	0.0	0.8	0.0	3.3	0.0	5.8	0.0	1.6	0.0	-4.2

Frame Line	Column Line	Wind_Right1 Horz	Wind_Right1 Vert	Wind_Left2 Horz	Wind_Left2 Vert	Wind_Right2 Horz	Wind_Right2 Vert	Wind_Long1 Horz	Wind_Long1 Vert	Wind_Long2 Horz	Wind_Long2 Vert	Seismic_Left Horz	Seismic_Left Vert
1	A	1.6	-0.6	-2.9	-0.7	1.2	1.2	1.1	-3.8	0.9	0.0	-0.7	-0.6
1	I	2.5	-4.1	-1.2	1.2	2.9	-0.7	-1.1	-3.8	-0.9	0.0	-0.7	0.6
1	C	0.0	-4.2	0.0	1.2	0.0	-1.1	0.0	-7.5	0.0	0.3	0.0	0.8
1	E	0.0	-2.9	0.0	0.2	0.0	0.2	0.0	-7.4	0.0	0.2	0.0	0.0
1	G	0.0	-3.9	0.0	-1.1	0.0	1.2	0.0	-7.5	0.0	0.3	0.0	-0.8

Frame Line	Column Line	Seismic_Right Horz	Seismic_Right Vert	Wind_Left3 Horz	Wind_Left3 Vert	Wind_Right3 Horz	Wind_Right3 Vert	Wind_Left4 Horz	Wind_Left4 Vert	Wind_Right4 Horz	Wind_Right4 Vert	MIN_SNOW Horz	MIN_SNOW Vert
1	A	0.7	0.6	-2.3	-2.1	1.8	-0.1	-3.0	-2.7	1.0	0.7	0.3	2.6
1	I	0.7	-0.6	-1.8	-0.1	2.3	-2.1	-1.0	0.7	3.0	-2.7	-0.3	2.6
1	C	0.0	-0.8	0.0	-1.3	0.0	-3.6	0.0	-1.4	0.0	-1.7	0.0	5.6
1	E	0.0	0.0	0.0	-2.3	0.0	-2.3	0.0	-0.4	0.0	-0.4	0.0	5.3
1	G	0.0	0.8	0.0	-3.6	0.0	-1.3	0.0	-1.7	0.0	-1.4	0.0	5.6

BUILDING BRACING REACTIONS

Wall Loc	Wall Line	Col Line	Reactions in plane of wall ± Reactions(k) Wind Horz	Wind Vert	Seismic Horz	Seismic Vert	Panel_Shear (lb/ft) Wind	Seis	Note
L_EW	1								(h)
F_SW	I								(f)
R_EW	2								(f)
B_SW	A								(f)

(f)Bracing loads are applied to the adjacent building
(h)Rigid frame at endwall

Reactions for seismic represent shear force, Eh

RIGID FRAME: ANCHOR BOLTS & BASE PLATES

Frm Line	Col Line	Anc._Bolt Qty	Anc._Bolt Dia	Base_Plate (in) Width	Base_Plate (in) Length	Base_Plate (in) Thick	Grout (in)
1	A	4	0.750	8.000	11.50	0.500	0.0
1	I	4	0.750	8.000	11.50	0.500	0.0
1	C	4	0.750	10.00	10.19	0.750	0.0
1	E	4	0.750	10.00	10.19	0.750	0.0
1	G	4	0.750	10.00	10.19	0.750	0.0

ENDWALL COLUMN: BASIC COLUMN REACTIONS (k)

Frm Line	Col Line	Dead Vert	Collat Vert	Live Vert	Snow Vert	Snow Drift Vert	Wind Left1 Vert	Wind Right1 Vert	Wind Left2 Vert	Wind Right2 Vert	Wind Long1 Vert	Wind Long2 Vert	Seis Left Vert
2	G	1.1	0.7	4.6	5.0	4.0	-4.1	-2.7	0.2	0.2	-6.6	0.2	0.0
2	E	1.1	0.7	4.7	5.1	4.0	-2.9	-2.9	0.1	0.1	-6.6	0.2	0.0
2	C	1.1	0.7	4.6	5.0	4.0	-2.7	-4.1	0.2	0.2	-6.6	0.2	0.0

Frm Line	Col Line	Seis Right Vert	MIN_SNOW Horz	MIN_SNOW Vert
2	G	0.0	0.0	4.7
2	E	0.0	0.0	4.8
2	C	0.0	0.0	4.7

ENDWALL COLUMN: ANCHOR BOLTS & BASE PLATES

Frm Line	Col Line	Anc._Bolt Qty	Anc._Bolt Dia	Base_Plate (in) Width	Base_Plate (in) Length	Base_Plate (in) Thick	Grout (in)
2	G	4	0.750	6.000	14.00	0.500	0.0
2	E	4	0.750	8.000	14.00	0.500	0.0
2	C	4	0.750	6.000	14.00	0.500	0.0

Iron City Structures, LLC
6731 Surlyn Court
Loveland, OH 45140

Engineer: DAZ Approved: DAZ	Date: 11/09/23
Drafter: DAZ	Date: 11/09/23
Detailer:	Date:
Checker:	Date:

☒ FOR PERMIT: THESE DRAWINGS, BEING FOR PERMIT, ARE BY DEFINITION NOT FINAL. ONLY DRAWINGS ISSUED "FOR CONSTRUCTION" CAN BE CONSIDERED AS COMPLETE.

☐ FOR CONSTRUCTION: FINAL DRAWINGS.

REVISION HISTory

REV.	DESCRIPTION	DATE

PROJECT:
TJB Manufacturing
33600 Liberty Parkway
North Ridgeville, OH 44039

CUSTOMER:
Makena Construction
104 Flat Rock Road
Bellevue, OH 44811

Project# C2203

PAGE: 3

DESIGN INFORMATION

1. All loading conditions are examined and only the maximum / minimum H or V and the corresponding H or V are reported.
2. Positive reactions are shown in the sketch. Foundation loads are in opposite directions.
3. Bracing reactions are in the plane of the brace with the H pointing away from the braced bay. The vertical reaction is downward.
4. Building reactions are based on the following building data:

DESIGN CRITERIA

Width (ft)	=120
Length (ft)	=69
Eave Height (ft)	=24
Roof Slope (rise/12)	=0.25:12
Building Code	=IBC 2015
Local Code (State/Prov)	=OBC 2017
Dead Load (psf)	=2.250
Collateral Load (psf)	=3.00
Roof Live Load (psf)	=20.00
Frame Live Load (psf)	=12.00
Snow:	
Ground Snow Load (psf)	=30.00
Snow Importance	=1.00
Thermal Coefficient	=1.00
Snow Exposure Factor	=1.0000
Slippery Roof	=Y
Roof Snow Load, Pf (psf)	=21
Min Roof Snow Load, Pmin (psf)	=20.00
Snow Drift Load =	=N/A
Wind:	
Ultimate Wind Speed (mph)	=115 mph
Risk Category	=II
Importance - Wind	=N/A
Wind Exposure	=C
Enclosure Classification	=C
--Internal Pressure Coefficients--	
Pressure	=0.18
Suction	=-0.18
----Components & Cladding----	
Design Pressure:	
Pressure (psf)	=28.97
Suction (psf)	=-38.55

Equivalent Lateral Brace Force Procedure.

Steel systems not specifically detailed for seismic resistance.

SEISMIC CRITERIA

Seismic Importance	= 1.00
Risk Category	= II
Mapped Spectral Response Accelerations	
Ss	=0.1430
S1	=0.0550
---Spectral Response Coefficients---	
Sds	=0.1525
Sd1	=0.0880
Site Class	=D
Seismic Design Category	=B
------Base Shear------	
Expanded Formula	= 0.667*Ie*Fa*Ss*W/R
Longitudinal Base Shear	(k) =10.90
Transverse Base Shear	(k) =11.04
--Seismic Response Coefficients--	
Frame	=0.051
FSW	=0.051
BSW	=0.051
--Response Modification Factors--	
Frame	=3
FSW	=3
BSW	=3

DEFLECTION LIMITS

ENDWALL COLUMN L/ 120
ENDWALL RAFTER (Live) L/ 180
ENDWALL RAFTER (Wind) L/ 180
WALL GIRTS L/ 240
PURLIN (LIVE) L/ 180
PURLIN (WIND) L/ 180
WALL PANEL L/ 60
ROOF PANEL (Live) L/ 60
ROOF PANEL (Wind) L/ 60
Main Frame (Horiz) H/ 100
Main Frame (Vert) L/ 180
WIND BRACING H/ 100
Main Frame (Crane) H/ 100
Main Frame (Seismic) H/ 50
SEISMIC BRACING H/ 50
PARTITION COLUMN L/ 120
PARTITION GIRT L/ 120
PARTITION PANEL L/ 120

BUILDING B

ENDWALL COLUMN: BASIC COLUMN REACTIONS (k)

Frm Line	Col Line	Dead Vert	Collat Vert	Live Vert	Snow Vert	Wind_Left1 Horz	Wind_Left1 Vert	Wind_Right1 Horz	Wind_Right1 Vert	Wind_Left2 Horz	Wind_Left2 Vert	Wind_Right2 Horz	Wind_Right2 Vert	Wind Press Horz
5	I	0.9	0.4	2.3	2.6	0.0	-3.9	0.0	-2.3	0.0	-2.6	0.0	-1.1	-3.3
5	H	1.6	1.0	6.0	6.8	-3.7	-13.9	0.0	-2.2	-3.7	-10.8	0.0	0.9	-6.2
5	F	1.5	0.9	5.3	6.0	0.0	-5.3	3.7	-9.1	0.0	-2.6	3.7	-6.4	-6.5
5	D	1.5	0.9	5.3	6.0	0.0	-5.5	0.0	-8.9	0.0	-2.8	0.0	-6.1	-6.5
5	B	1.6	1.0	6.0	6.8	0.0	-5.8	0.0	-10.4	0.0	-2.7	0.0	-7.2	-6.2
5	A	0.9	0.4	2.3	2.6	0.0	-2.3	0.0	-3.9	0.0	-1.1	0.0	-2.7	-3.3

Frm Line	Col Line	Wind Suct Horz	Wind_Long1 Horz	Wind_Long1 Vert	Wind_Long2 Horz	Wind_Long2 Vert	Seis_Left Horz	Seis_Left Vert	Seis_Right Horz	Seis_Right Vert	Seis Long Horz	-MIN_SNOW-- Horz	-MIN_SNOW-- Vert
5	I	3.7	0.0	-3.9	0.0	-2.3	0.0	0.0	0.0	0.0	0.6	0.0	2.4
5	H	6.9	0.0	-10.2	-0.2	-6.0	-1.9	-1.8	0.0	1.8	1.2	0.0	6.5
5	F	7.2	0.2	-9.0	0.0	-5.3	0.0	1.8	1.9	-1.8	1.2	0.0	5.8
5	D	7.2	0.0	-5.5	0.0	-8.8	0.0	0.0	0.0	0.0	1.2	0.0	5.8
5	B	6.9	0.0	-5.8	0.0	-10.4	0.0	0.0	0.0	0.0	1.2	0.0	6.5
5	A	3.7	0.0	-2.3	0.0	-3.9	0.0	0.0	0.0	0.0	0.6	0.0	2.4

BUILDING BRACING REACTIONS

Wall Loc	Wall Line	Col Line	Reactions in plane of wall ± Reactions(k) Wind Horz	Wind Vert	Seismic Horz	Seismic Vert	Panel_Shear (lb/ft) Wind	Seis	Note
L_EW	2								(h)
F_SW	I	3,4	14.5	*	5.4	*			
R_EW	5	H,F	Bracing, see EW reactions						
B_SW	A	4,3	14.5	*	5.4	*			

(h)Rigid frame at endwall

*See RF reactions table for vertical and horizontal reactions in plane of the rigid frame.

Reactions for seismic represent shear force, Eh

ENDWALL COLUMN: ANCHOR BOLTS & BASE PLATES

Frm Line	Col Line	Anc._Bolt Qty	Anc._Bolt Dia	Base_Plate (in) Width	Base_Plate (in) Length	Base_Plate (in) Thick	Grout (in)
5	I	4	0.750	6.000	10.19	0.500	0.0
5	H	4	0.750	6.000	10.19	0.500	0.0
5	F	4	0.750	6.000	10.19	0.500	0.0
5	D	4	0.750	6.000	10.19	0.500	0.0
5	B	4	0.750	6.000	10.19	0.500	0.0
5	A	4	0.750	6.000	10.19	0.500	0.0

FRAME LINES: 2

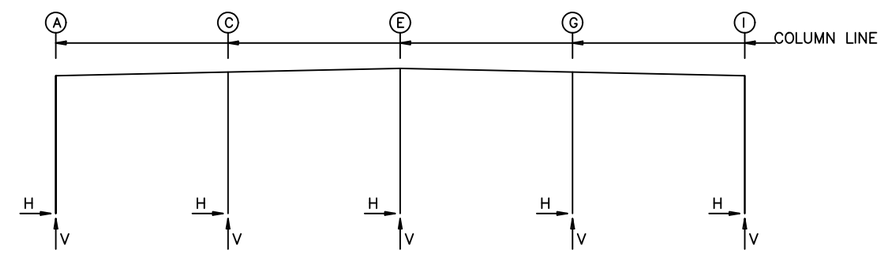

RIGID FRAME: BASIC COLUMN REACTIONS (k)

Frame Line	Column Line	Dead Horz	Dead Vert	Collateral Horz	Collateral Vert	Live Horz	Live Vert	Snow Horz	Snow Vert	Snow_Drift Horz	Snow_Drift Vert	Wind_Left1 Horz	Wind_Left1 Vert
2	A	0.1	1.1	0.1	0.5	0.3	2.1	0.4	3.7	0.0	0.0	-4.6	-8.0
2	I	-0.1	1.1	-0.1	0.5	-0.3	2.1	-0.4	3.7	0.0	0.0	-4.2	-0.9
2	C	0.0	3.1	0.0	1.8	0.0	9.1	0.0	12.8	0.0	3.9	0.0	-13.3
2	E	0.0	3.1	0.0	1.8	0.0	9.0	0.0	12.6	0.0	4.0	0.0	-11.9
2	G	0.0	3.1	0.0	1.8	0.0	9.1	0.0	12.8	0.0	3.9	0.0	-12.0

Frame Line	Column Line	Wind_Right1 Horz	Wind_Right1 Vert	Wind_Left2 Horz	Wind_Left2 Vert	Wind_Right2 Horz	Wind_Right2 Vert	Wind_Long1 Horz	Wind_Long1 Vert	Wind_Long2 Horz	Wind_Long2 Vert	Seismic_Left Horz	Seismic_Left Vert
2	A	4.2	-0.9	-5.6	-6.1	3.3	1.1	1.7	-4.2	1.5	-3.1	-1.9	-1.9
2	I	4.6	-8.0	-3.3	1.1	5.6	-6.1	-1.5	-3.1	-1.7	-4.2	-1.9	1.9
2	C	0.0	-12.0	0.0	-5.7	0.0	-5.8	0.0	-15.2	0.0	-4.5	0.0	2.2
2	E	0.0	-11.9	0.0	-5.4	0.0	-5.4	0.0	-13.5	0.0	-6.7	0.0	0.0
2	G	0.0	-13.3	0.0	-5.8	0.0	-5.7	0.0	-11.3	0.0	-8.5	0.0	-2.3

Frame Line	Column Line	Seismic_Right Horz	Seismic_Right Vert	-MIN_SNOW-- Horz	-MIN_SNOW-- Vert
2	A	1.9	1.9	0.4	3.5
2	I	1.9	-1.9	-0.4	3.5
2	C	0.0	-2.2	0.0	7.4
2	E	0.0	0.0	0.0	7.2
2	G	0.0	2.3	0.0	7.4

RIGID FRAME: ANCHOR BOLTS & BASE PLATES

Frm Line	Col Line	Anc._Bolt Qty	Anc._Bolt Dia	Base_Plate (in) Width	Base_Plate (in) Length	Base_Plate (in) Thick	Grout (in)
2	A	4	0.750	8.000	11.50	0.500	0.0
2	I	4	0.750	8.000	11.50	0.500	0.0
2	C	4	0.750	8.000	14.00	0.500	0.0
2	E	4	0.750	8.000	14.00	0.500	0.0
2	G	4	0.750	8.000	14.00	0.500	0.0

RIGID FRAME: ANCHOR BOLTS & BASE PLATES

Frm Line	Col Line	Anc._Bolt Qty	Anc._Bolt Dia	Base_Plate (in) Width	Base_Plate (in) Length	Base_Plate (in) Thick	Grout (in)
3*	A	4	0.750	8.000	12.00	0.500	0.0
3*	I	4	0.750	8.000	12.00	0.500	0.0
3*	E	4	0.750	10.00	10.00	0.750	0.0

3* Frame lines: 3 4

FRAME LINES: 3 4

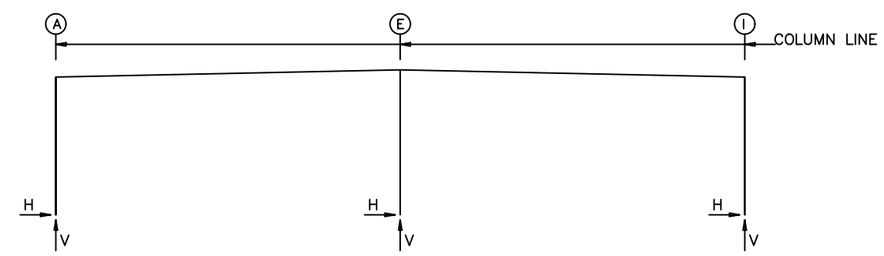

RIGID FRAME: BASIC COLUMN REACTIONS (k)

Frame Line	Column Line	Dead Horz	Dead Vert	Collateral Horz	Collateral Vert	Live Horz	Live Vert	Snow Horz	Snow Vert	Wind_Left1 Horz	Wind_Left1 Vert	Wind_Right1 Horz	Wind_Right1 Vert
3*	A	0.6	2.9	0.6	1.9	2.3	7.7	4.0	13.5	-8.6	-17.7	2.3	-8.6
3*	I	-0.6	2.9	-0.6	1.9	-2.3	7.7	-4.0	13.5	-2.3	-8.6	8.6	-17.7
3*	E	0.0	5.4	0.0	4.4	0.0	17.7	0.0	31.0	0.0	-30.0	0.0	-30.0

Frame Line	Column Line	Wind_Left2 Horz	Wind_Left2 Vert	Wind_Right2 Horz	Wind_Right2 Vert	Wind_Long1 Horz	Wind_Long1 Vert	Wind_Long2 Horz	Wind_Long2 Vert	Seismic_Left Horz	Seismic_Left Vert	Seismic_Right Horz	Seismic_Right Vert
3*	A	-9.0	-11.2	2.0	-2.2	0.3	-29.1	0.1	-23.1	-1.8	-0.7	1.8	0.7
3*	I	-2.0	-2.2	9.0	-11.2	-0.1	-23.1	-0.3	-29.1	-1.8	0.7	1.8	-0.7
3*	E	0.0	-16.2	0.0	-16.2	0.0	-27.4	0.0	-27.4	0.0	0.0	0.0	0.0

Frame Line	Column Line	-Seismic_Long Horz	-Seismic_Long Vert	-MIN_SNOW-- Horz	-MIN_SNOW-- Vert
3*	A	0.0	-5.1	3.8	12.8
3*	I	0.0	-5.1	-3.8	12.8
3*	E	0.0	0.0	0.0	29.6

3* Frame lines: 3 4

ICS

Iron City Structures, LLC
6731 Surlyn Court
Loveland, OH 45140

Engineer: DAZ Approved: DAZ	Date: 11/09/23
Drafter: DAZ	Date: 11/09/23
Detailer:	Date:
Checker:	Date:

☒ FOR PERMIT: THESE DRAWINGS, BEING FOR PERMIT, ARE BY DEFINITION, NOT FINAL. ONLY DRAWINGS ISSUED "FOR CONSTRUCTION" CAN BE CONSIDERED AS COMPLETE.

☐ FOR CONSTRUCTION: FINAL DRAWINGS.

REVISION HISTory

REV.	DESCRIPTION	DATE

PROJECT:
TJB Manufacturing
33600 Liberty Parkway
North Ridgeville, OH 44039

CUSTOMER:
Makena Construction
104 Flat Rock Road
Bellevue, OH 44811

Project# C2203

PAGE: 4

Anchor Bolt Dia= 3/4"

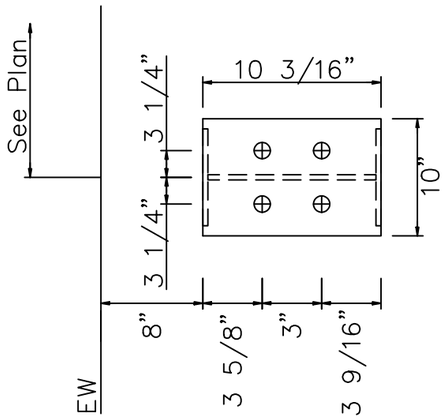

DETAIL A

Anchor Bolt Dia= 3/4"

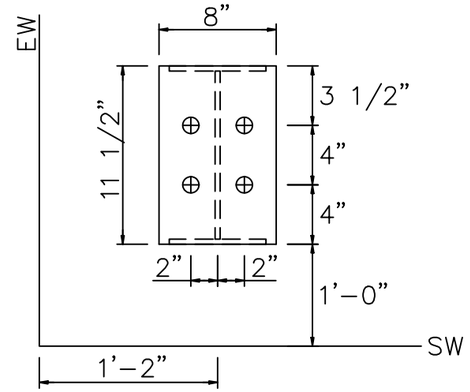

DETAIL B

Anchor Bolt Dia= 3/4"

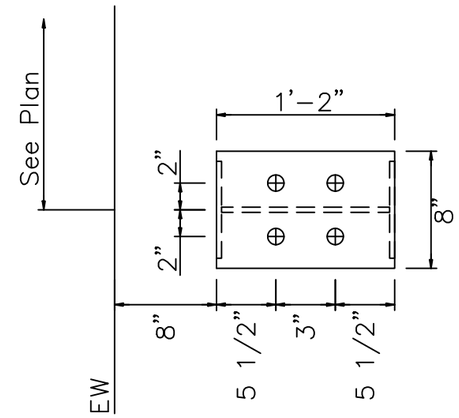

DETAIL C

Anchor Bolt Dia= 3/4"

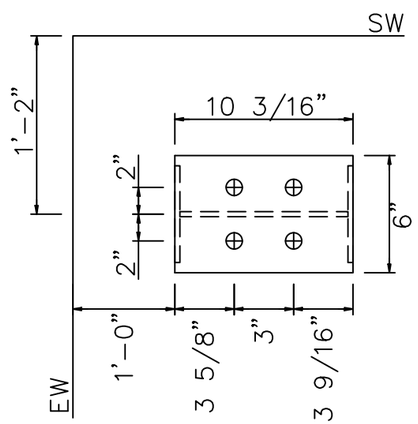

DETAIL D

Anchor Bolt Dia= 3/4"

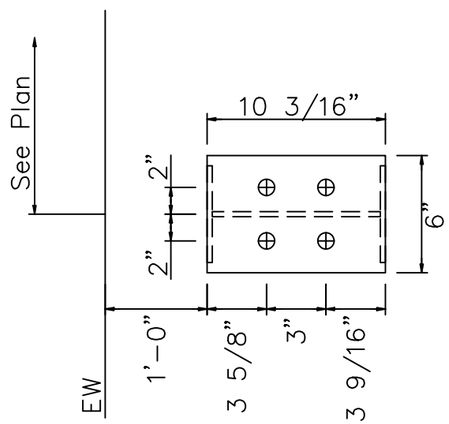

DETAIL E

Anchor Bolt Dia= 3/4"

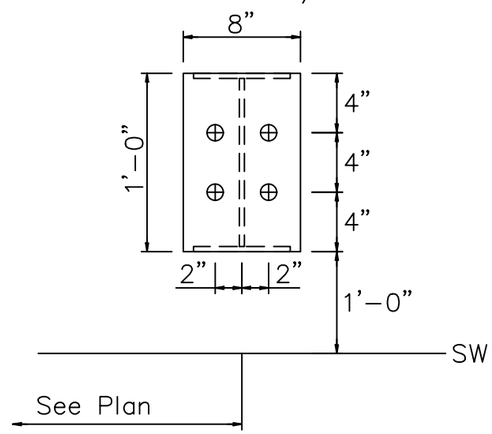

DETAIL F

Anchor Bolt Dia= 3/4"

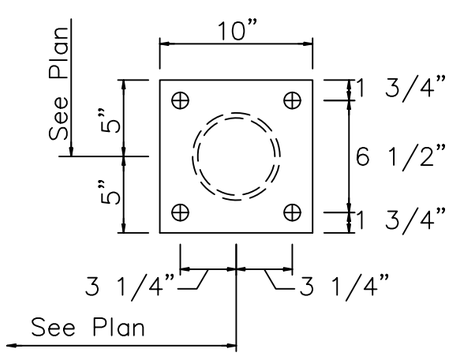

DETAIL G

ICS

Iron City Structures, LLC
6731 Surlyn Court
Loveland, OH 45140

Engineer: DAZ Approved: DAZ	Date: 11/09/23
Drafter: DAZ	Date: 11/09/23
Detailer:	Date:
Checker:	Date:

☒ FOR PERMIT: THESE DRAWINGS, BEING FOR PERMIT, ARE BY DEFINITION NOT FINAL. ONLY DRAWINGS ISSUED "FOR CONSTRUCTION" CAN BE CONSIDERED AS COMPLETE.

☐ FOR CONSTRUCTION: FINAL DRAWINGS.

REVISION HISTory

REV.	DESCRIPTION	DATE

PROJECT:
TJB Manufacturing
33600 Liberty Parkway
North Ridgeville, OH 44039

CUSTOMER:
Makena Construction
104 Flat Rock Road
Bellevue, OH 44811

Project# C2203

PAGE: 5

SPLICE BOLT TABLE						
Mark	Qty Top	Bot	Int	Type	Dia	Length
SP–1	4	4	0	A325	0.750	2.00

CAP PLATE BOLTS				
Mark	Qty	Type	Dia	Length
EC–1	4	A325	0.750	1.75
EC–2	4	A325	0.750	1.75
EC–3	4	A325	0.750	1.75

▽FLANGE BRACES: Both Sides(U.N.)
FBxxA(1)
A – L15X1/8

MEMBER TABLE					
Mark	Web Depth Start/End	Web Plate Thick	Web Plate Length	Outside Flange W x Thk x Length	Inside Flange W x Thk x Length
RF1–1	11.0/11.0	0.149	244.7	6 x 1/4" x 244.5 6 x 1/4" x 23.2	6 x 1/4" x 230.4
RF1–2	11.0/11.0 11.0/11.0	0.149 0.149	270.0 185.6	6 x 1/4" x 455.4	6 x 1/4" x 455.6
RF1–3	11.0/11.0	0.149	203.0	6 x 1/4" x 203.0	6 x 1/4" x 202.7
RF1–4	11.0/11.8	0.149	71.0	6 x 1/4" x 35.5 6 x 1/4" x 35.5	6 x 1/4" x 71.0
RF1–5	11.0/11.0	0.149	203.0	6 x 1/4" x 203.0	6 x 1/4" x 202.7
RF1–6	11.0/11.0 11.0/11.0	0.149 0.149	185.6 270.0	6 x 1/4" x 455.4	6 x 1/4" x 455.6
EC–1	W10X22				
EC–2	W10X22				
EC–3	W10X22				

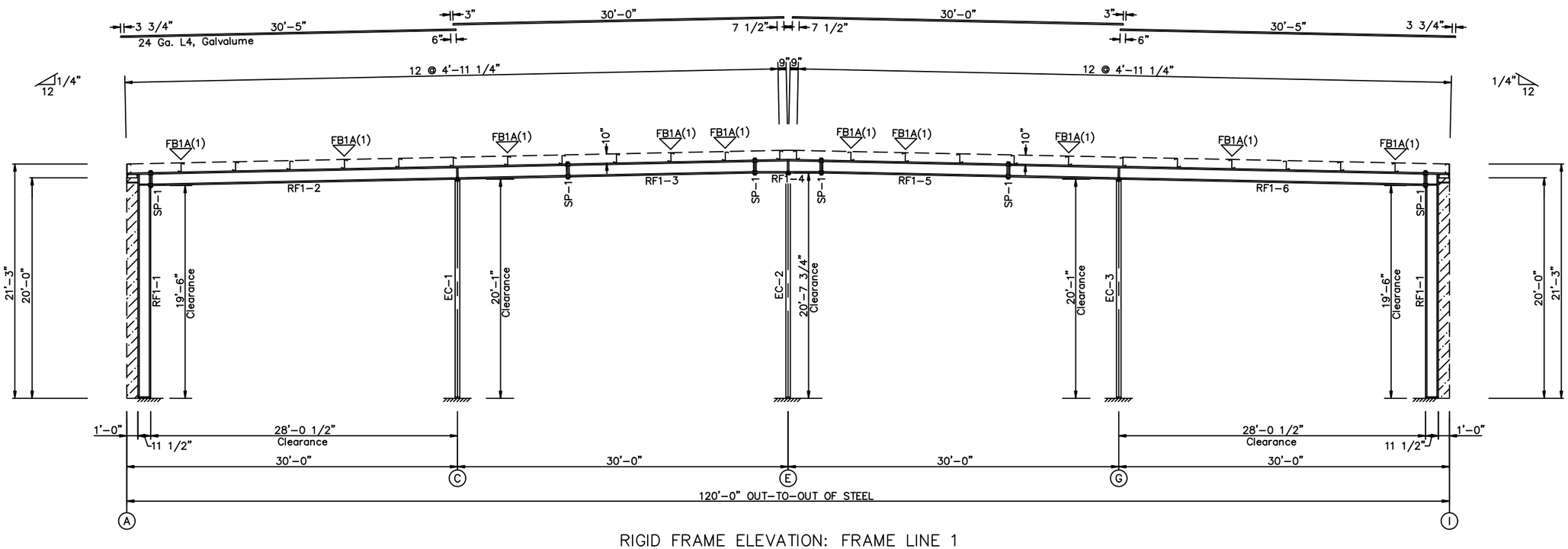

RIGID FRAME ELEVATION: FRAME LINE 1

12" CMU WALL (BY OTHERS)

GENERAL NOTES:

1. See Detail Sheets for Connection Information.
2. See Shipping List for Flange Brace Lengths.

Iron City Structures, LLC
6731 Surlyn Court
Loveland, OH 45140

Engineer: DAZ Approved: DAZ	Date: 11/09/23
Drafter: DAZ	Date: 11/09/23
Detailer:	Date:
Checker:	Date:

☒ FOR PERMIT: THESE DRAWINGS, BEING FOR PERMIT, ARE BY DEFINITION, NOT FINAL. ONLY DRAWINGS ISSUED "FOR CONSTRUCTION" CAN BE CONSIDERED AS COMPLETE.

☐ FOR CONSTRUCTION: FINAL DRAWINGS.

REVISION HISTORY

REV.	DESCRIPTION	DATE

PROJECT:
TJB Manufacturing
33600 Liberty Parkway
North Ridgeville, OH 44039

CUSTOMER:
Makena Construction
104 Flat Rock Road
Bellevue, OH 44811

Project# C2203

PAGE: 6

SPLICE BOLT TABLE						
Mark	Qty Top	Bot	Int	Type	Dia	Length
SP–1	4	4	0	A325	1.000	2.75
SP–2	4	4	0	A325	0.750	2.00

CAP PLATE BOLTS				
Mark	Qty	Type	Dia	Length
EC–100	4	A325	0.750	1.75
EC–101	4	A325	0.750	1.75
EC–102	4	A325	0.750	1.75

▽FLANGE BRACES: Both Sides(U.N.)
FBxxB(1)
B – L20X1/4
A – L15X1/8

MEMBER TABLE					
Mark	Web Depth Start/End	Web Plate Thick	Web Plate Length	Outside Flange W x Thk x Length	Inside Flange W x Thk x Length
RF1–100	11.0/14.3	0.149	217.8	6 x 1/4" x 120.0	6 x 1/4" x 120.0
	14.3/15.0	0.149	60.0	6 x 5/16" x 157.5	6 x 5/16" x 139.7
				6 x 1/4" x 26.9	
RF1–101	14.0/14.0	0.149	270.0	6 x 1/4" x 451.3	6 x 1/4" x 451.3
	14.0/14.0	0.149	181.3		
RF1–102	14.0/14.0	0.149	203.0	6 x 1/4" x 203.0	6 x 1/4" x 202.7
RF1–103	14.0/14.8	0.149	71.0	6 x 1/4" x 35.5	6 x 1/4" x 71.0
				6 x 1/4" x 35.5	
RF1–104	14.0/14.0	0.149	203.0	6 x 1/4" x 203.0	6 x 1/4" x 202.7
RF1–105	14.0/14.0	0.149	181.3	6 x 1/4" x 451.3	6 x 1/4" x 451.3
	14.0/14.0	0.149	270.0		
RF1–106	15.0/14.3	0.149	60.0	6 x 1/4" x 26.9	6 x 5/16" x 139.7
	14.3/11.0	0.149	217.8	6 x 5/16" x 157.5	6 x 1/4" x 120.0
				6 x 1/4" x 120.0	
EC–100	W1406084				
EC–101	W1408064				
EC–102	W1406084				

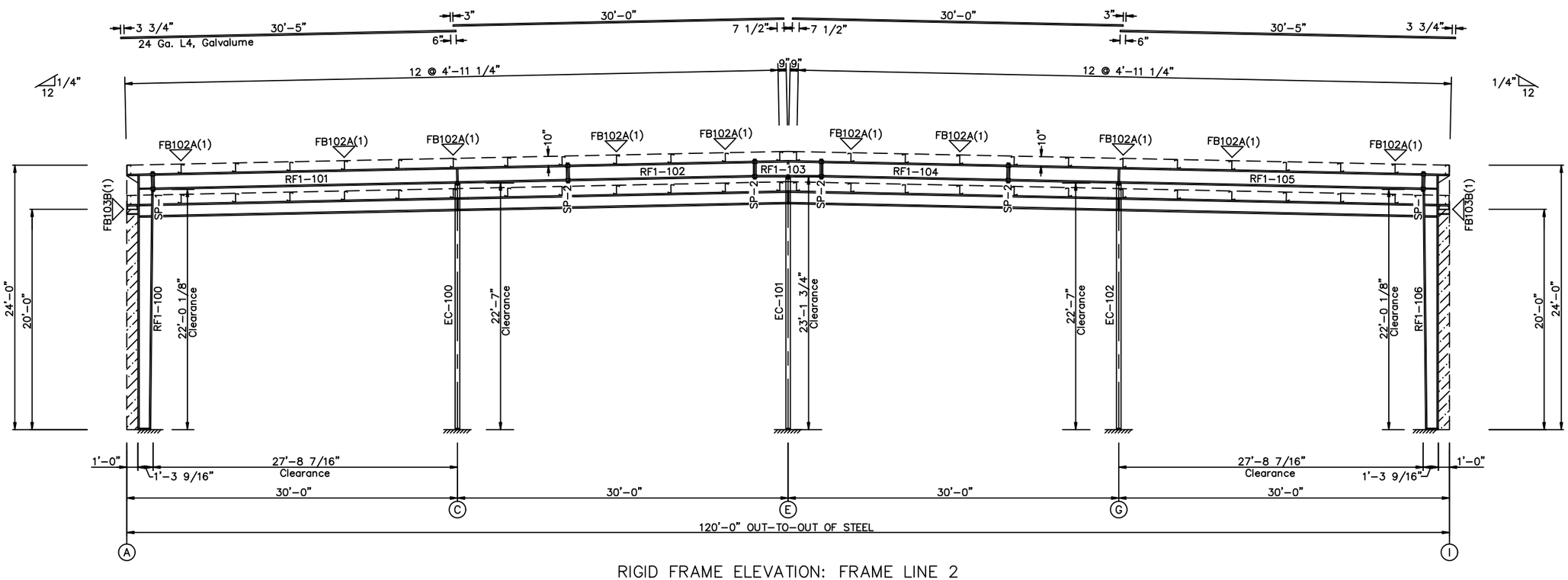

RIGID FRAME ELEVATION: FRAME LINE 2

12" CMU WALL (BY OTHERS)

GENERAL NOTES:

1. See Detail Sheets for Connection Information.
2. See Shipping List for Flange Brace Lengths.

ICS

Iron City Structures, LLC
6731 Surlyn Court
Loveland, OH 45140

Engineer: DAZ Approved: DAZ	Date: 11/09/23
Drafter: DAZ	Date: 11/09/23
Detailer:	Date:
Checker:	Date:

☒ FOR PERMIT: THESE DRAWINGS, BEING FOR PERMIT, ARE BY DEFINITION, NOT FINAL. ONLY DRAWINGS ISSUED "FOR CONSTRUCTION" CAN BE CONSIDERED AS COMPLETE.

☐ FOR CONSTRUCTION: FINAL DRAWINGS.

REVISION HISTORY

REV.	DESCRIPTION	DATE

PROJECT:
TJB Manufacturing
33600 Liberty Parkway
North Ridgeville, OH 44039

CUSTOMER:
Makena Construction
104 Flat Rock Road
Bellevue, OH 44811

Project# C2203

PAGE: 7

SPLICE BOLT TABLE						
Mark	Qty Top	Bot	Int	Type	Dia	Length
SP–1	4	4	2	A325	0.750	2.25
SP–2	4	4	2	A325	0.750	2.50

CAP PLATE BOLTS				
Mark	Qty	Type	Dia	Length
RF2–104	4	A325	0.750	2.25

▽FLANGE BRACES: Both Sides(U.N.)
FBxxB(1)
B – L20X1/4
A – L15X1/8

MEMBER TABLE					
Mark	Web Depth Start/End	Web Plate Thick	Web Plate Length	Outside Flange W x Thk x Length	Inside Flange W x Thk x Length
RF2–100	11.0/19.7	0.149	217.9	6 x 3/8" x 120.0	6 x 5/8" x 249.7
	19.7/21.0	0.149	60.0	6 x 1/2" x 157.5	
				6 x 1/4" x 32.8	
RF2–101	25.0/25.0	0.188	205.5	6 x 1/4" x 205.5	6 x 1/4" x 325.5
	25.0/25.0	0.149	120.0	6 x 5/16" x 120.0	
RF2–102	25.0/25.0	0.149	120.0	6 x 5/16" x 120.0	6 x 1/4" x 240.0
	25.0/25.0	0.188	202.6	6 x 1/4" x 202.6	6 x 1/2" x 82.1
RF2–103	25.0/25.8	0.219	70.5	6 x 3/8" x 35.3	6 x 1/2" x 70.5
				6 x 3/8" x 35.3	
RF2–104	P6X19				

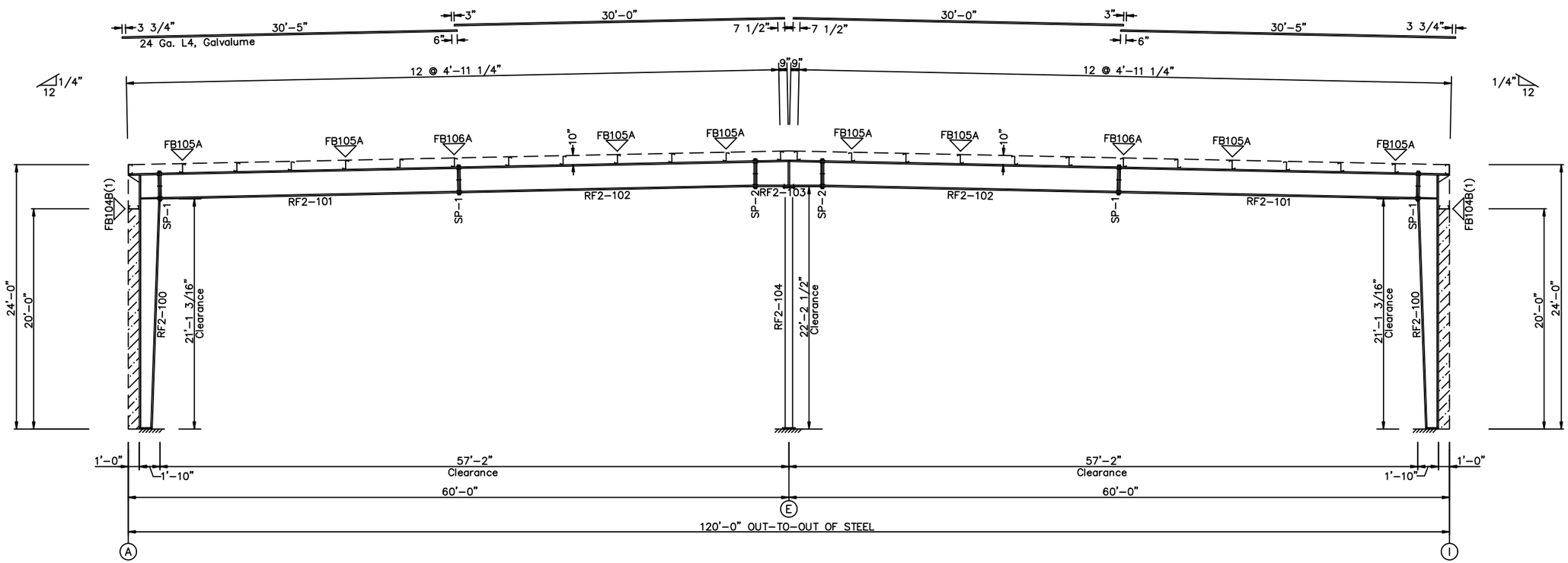

RIGID FRAME ELEVATION: FRAME LINE 3 4

12" CMU WALL (BY OTHERS)

GENERAL NOTES:

1. See Detail Sheets for Connection Information.
2. See Shipping List for Flange Brace Lengths.

Iron City Structures, LLC
6731 Surlyn Court
Loveland, OH 45140

Engineer: DAZ Approved: DAZ	Date: 11/09/23
Drafter: DAZ	Date: 11/09/23
Detailer:	Date:
Checker:	Date:

☒ FOR PERMIT: THESE DRAWINGS, BEING FOR PERMIT, ARE BY DEFINITION, NOT FINAL. ONLY DRAWINGS ISSUED "FOR CONSTRUCTION" CAN BE CONSIDERED AS COMPLETE.

☐ FOR CONSTRUCTION: FINAL DRAWINGS.

REVISION HISTORY

REV.	DESCRIPTION	DATE

PROJECT:
TJB Manufacturing
33600 Liberty Parkway
North Ridgeville, OH 44039

CUSTOMER:
Makena Construction
104 Flat Rock Road
Bellevue, OH 44811

Project# C2203

PAGE: 8

MEMBER TABLE FRAME LINE A			
QUAN	MARK	PART	LENGTH
1	G-2	12X35C13	14'-11 3/4"

MEMBER TABLE FRAME LINE A			
QUAN	MARK	PART	LENGTH
1	G-102	12X35C10	22'-11 1/2"
1	G-103	12X35C10	22'-11 1/2"
1	G-104	12X35C10	22'-11 1/2"
3	JB-1	12X35C16	2'-10"
2	CB-102	1.00_ROD	20'-0"
2	CB-103	1.00_ROD	12'-4 7/8"

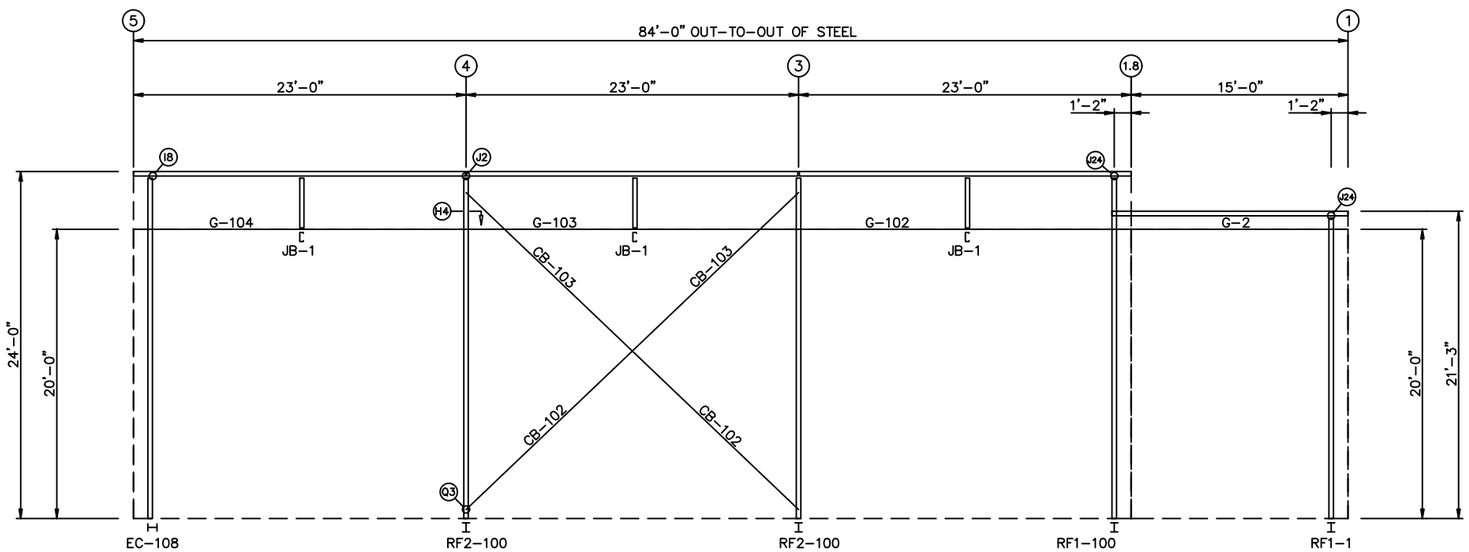

SIDEWALL FRAMING: FRAME LINE A

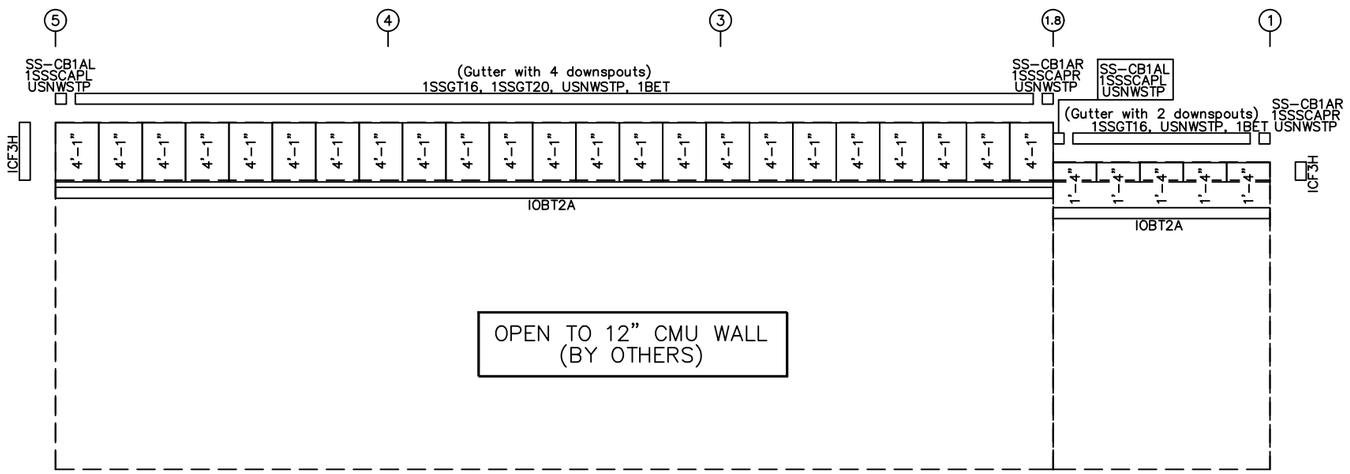

SIDEWALL SHEETING & TRIM: FRAME LINE A

PANELS: 26 Ga. R – TBD

GENERAL NOTES:

1. Use TEK5WW screws in place of SD150 panel screws at all 10 gage members.
2. All connections to door or window jambs where the clip is not designated in the clip table / drawing are made with JC# clips (#= Girt Depth).

TRIM COLORS

EAVE TRIM	= TBD	CORNER TRIM	= TBD
BASE TRIM	= TBD	GUTTER	= TBD
DOOR TRIM	= TBD	DOWNSPOUTS	= TBD
RAKE TRIM	= TBD		

* LINER TRIM = Liner panel color
* SOFFIT TRIM = Soffit panel color

* ONLY APPLICABLE IF LINER TRIM OR SOFFIT PANEL IS INDICATED ON BUILDING ORDER.

Iron City Structures, LLC
6731 Surlyn Court
Loveland, OH 45140

Engineer: DAZ Approved: DAZ	Date: 11/09/23
Drafter: DAZ	Date: 11/09/23
Detailer:	Date:
Checker:	Date:

☒ FOR PERMIT: THESE DRAWINGS, BEING FOR PERMIT, ARE BY DEFINITION NOT FINAL. ONLY DRAWINGS ISSUED "FOR CONSTRUCTION" CAN BE CONSIDERED AS COMPLETE.

☐ FOR CONSTRUCTION: FINAL DRAWINGS.

REVISION HISTORY

REV.	DESCRIPTION	DATE

PROJECT:
TJB Manufacturing
33600 Liberty Parkway
North Ridgeville, OH 44039

CUSTOMER:
Makena Construction
104 Flat Rock Road
Bellevue, OH 44811

Project# C2203

PAGE: 9

MEMBER TABLE FRAME LINE I			
QUAN	MARK	PART	LENGTH
1	G–1	12X35C13	14'–11 3/4"

MEMBER TABLE FRAME LINE I			
QUAN	MARK	PART	LENGTH
1	G–102	12X35C10	22'–11 1/2"
1	G–103	12X35C10	22'–11 1/2"
1	G–104	12X35C10	22'–11 1/2"
3	JB–1	12X35C16	2'–10"
2	CB–102	1.00_ROD	20'–0"
2	CB–103	1.00_ROD	12'–4 7/8"

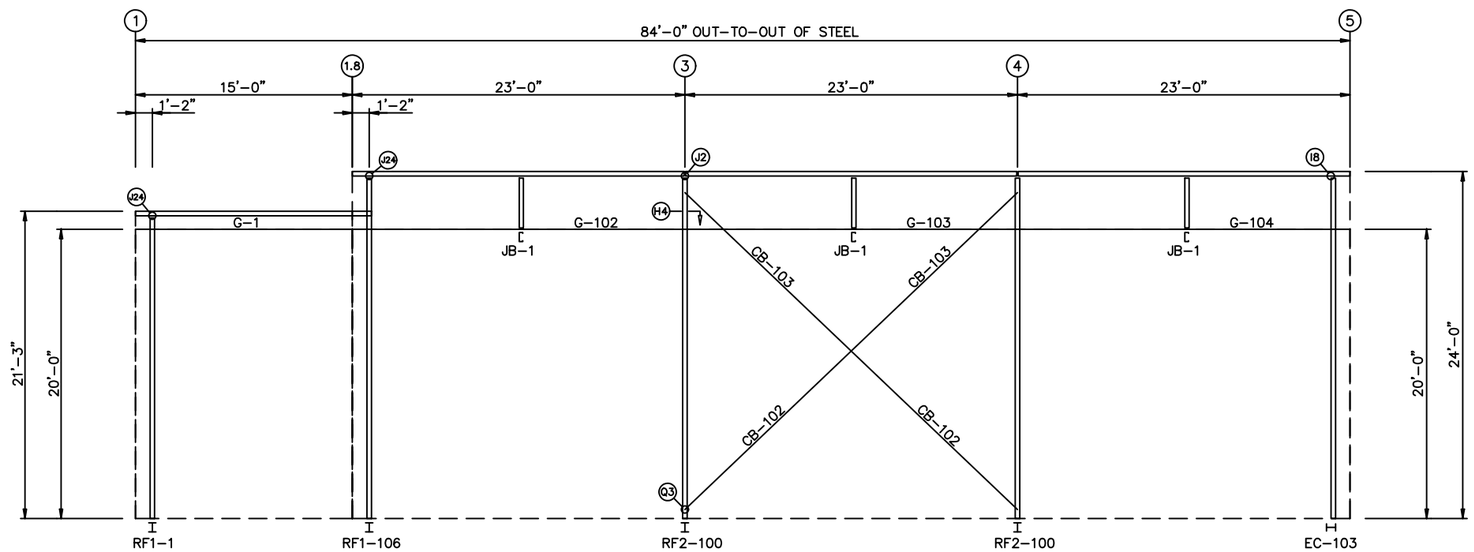

SIDEWALL FRAMING: FRAME LINE I

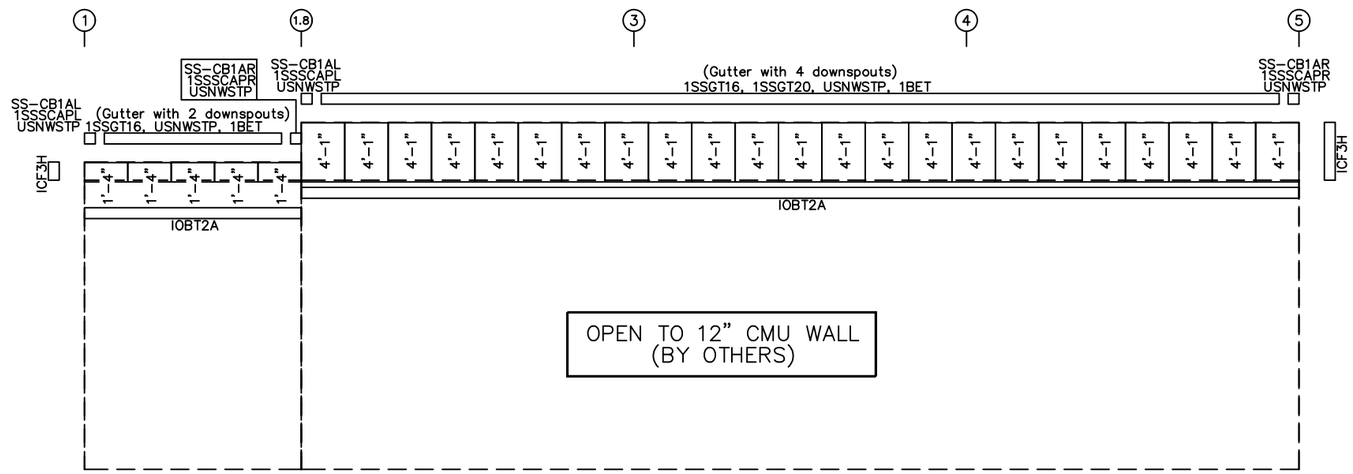

SIDEWALL SHEETING & TRIM: FRAME LINE I

PANELS: 26 Ga. R – TBD

TRIM COLORS

EAVE TRIM	= TBD	CORNER TRIM	= TBD
BASE TRIM	= TBD	GUTTER	= TBD
DOOR TRIM	= TBD	DOWNSPOUTS	= TBD
RAKE TRIM	= TBD		

* LINER TRIM = Liner panel color

* SOFFIT TRIM = Soffit panel color

* ONLY APPLICABLE IF LINER TRIM OR SOFFIT PANEL IS INDICATED ON BUILDING ORDER.

GENERAL NOTES:

1. Use TEK5WW screws in place of SD150 panel screws at all 10 gage members.
2. All connections to door or window jambs where the clip is not designated in the clip table / drawing are made with JC# clips (#= Girt Depth).

Iron City Structures, LLC
6731 Surlyn Court
Loveland, OH 45140

Engineer: DAZ Approved: DAZ	Date: 11/09/23
Drafter: DAZ	Date: 11/09/23
Detailer:	Date:
Checker:	Date:

☒ FOR PERMIT: THESE DRAWINGS, BEING FOR PERMIT, ARE BY DEFINITION, NOT FINAL. ONLY DRAWINGS ISSUED "FOR CONSTRUCTION" CAN BE CONSIDERED AS COMPLETE.

☐ FOR CONSTRUCTION: FINAL DRAWINGS.

REVISION HISTORY

REV.	DESCRIPTION	DATE

PROJECT:
TJB Manufacturing
33600 Liberty Parkway
North Ridgeville, OH 44039

CUSTOMER:
Makena Construction
104 Flat Rock Road
Bellevue, OH 44811

Project# C2203

PAGE: 10

BOLT TABLE FRAME LINE 1				
LOCATION	QUAN	TYPE	DIA	LENGTH
Columns/Raf	4	A325	3/4"	1 1/2"

MEMBER TABLE FRAME LINE 1			
QUAN	MARK	PART	LENGTH
1	EC-1	W10X22	20'-1 1/16"
1	EC-2	W10X22	20'-7 3/4"
1	EC-3	W10X22	20'-1 1/16"

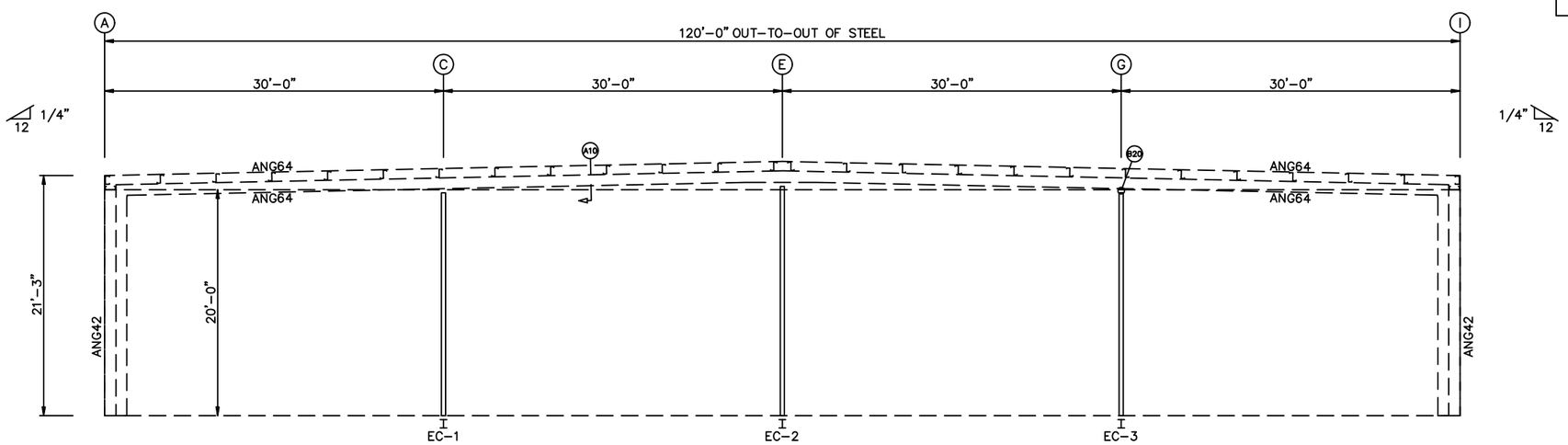

ENDWALL FRAMING: FRAME LINE 1

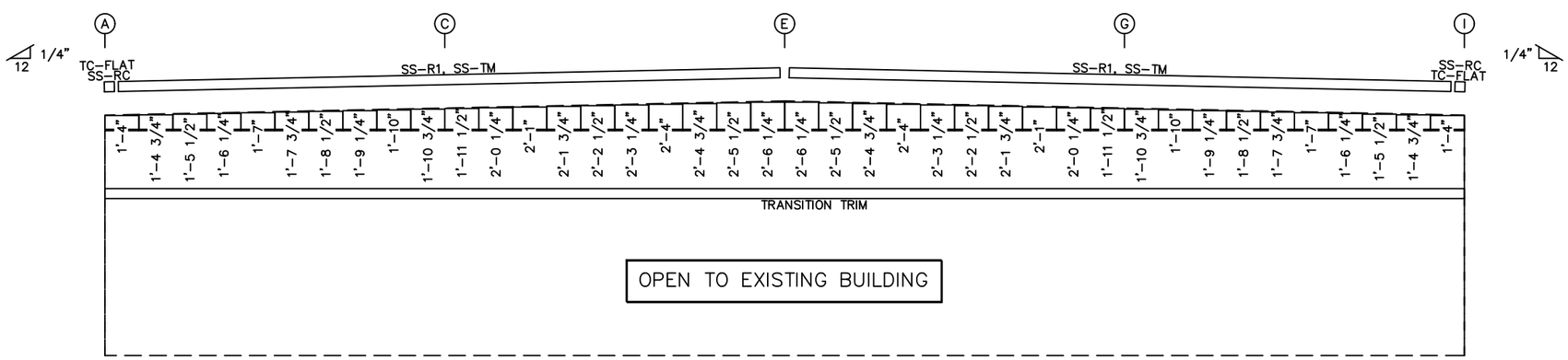

ENDWALL SHEETING & TRIM: FRAME LINE 1

PANELS: 26 Ga. R – TBD

TRIM COLORS			
EAVE TRIM	= TBD	CORNER TRIM	= TBD
BASE TRIM	= TBD	GUTTER	= TBD
DOOR TRIM	= TBD	DOWNSPOUTS	= TBD
RAKE TRIM	= TBD		
* LINER TRIM	= Liner panel color		
* SOFFIT TRIM	= Soffit panel color		

* ONLY APPLICABLE IF LINER TRIM OR SOFFIT PANEL IS INDICATED ON BUILDING ORDER.

GENERAL NOTES:

1. Use TEK5WW screws in place of SD150 panel screws at all 10 gage members.
2. See detail C7A for field coping of coldform endwall column flange braces.
3. All connections to door or window jambs where the clip is not designated in the clip table / drawing are made with JC# clips (#= Girt Depth).

Iron City Structures, LLC
6731 Surlyn Court
Loveland, OH 45140

Engineer: DAZ Approved: DAZ	Date: 11/09/23
Drafter: DAZ	Date: 11/09/23
Detailer:	Date:
Checker:	Date:

☒ FOR PERMIT: THESE DRAWINGS, BEING FOR PERMIT, ARE BY DEFINITION NOT FINAL. ONLY DRAWINGS ISSUED "FOR CONSTRUCTION" CAN BE CONSIDERED AS COMPLETE.

☐ FOR CONSTRUCTION: FINAL DRAWINGS.

REVISION HISTORY

REV.	DESCRIPTION	DATE

PROJECT:
TJB Manufacturing
33600 Liberty Parkway
North Ridgeville, OH 44039

CUSTOMER:
Makena Construction
104 Flat Rock Road
Bellevue, OH 44811

Project# C2203

PAGE: 11

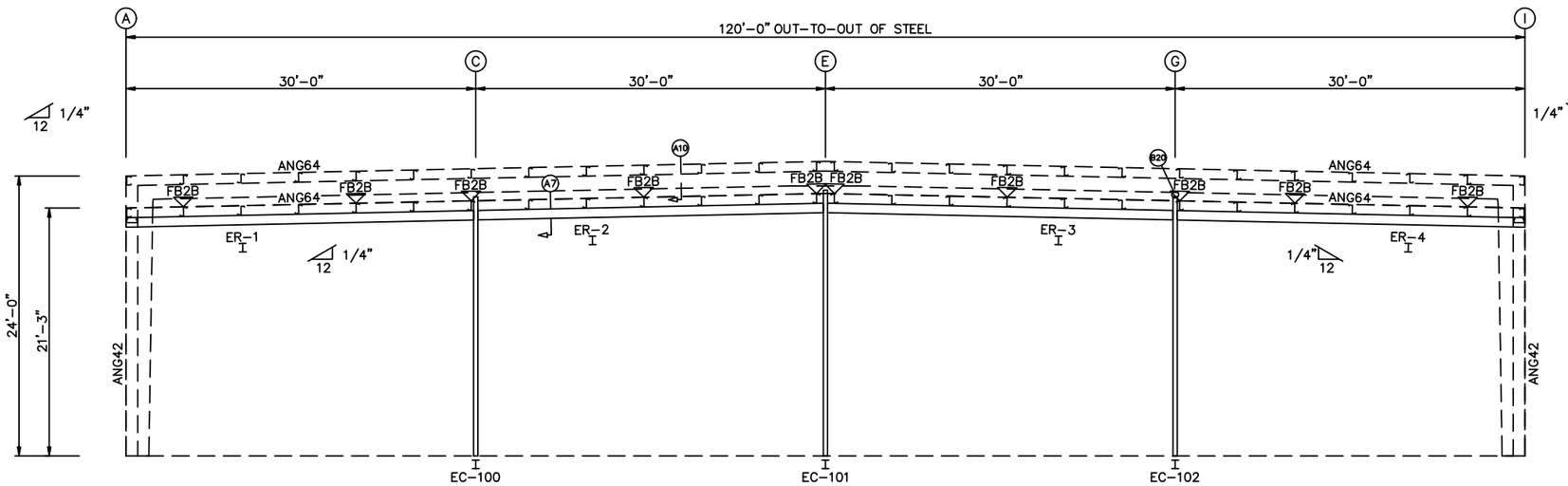

ENDWALL FRAMING: FRAME LINE 1.8

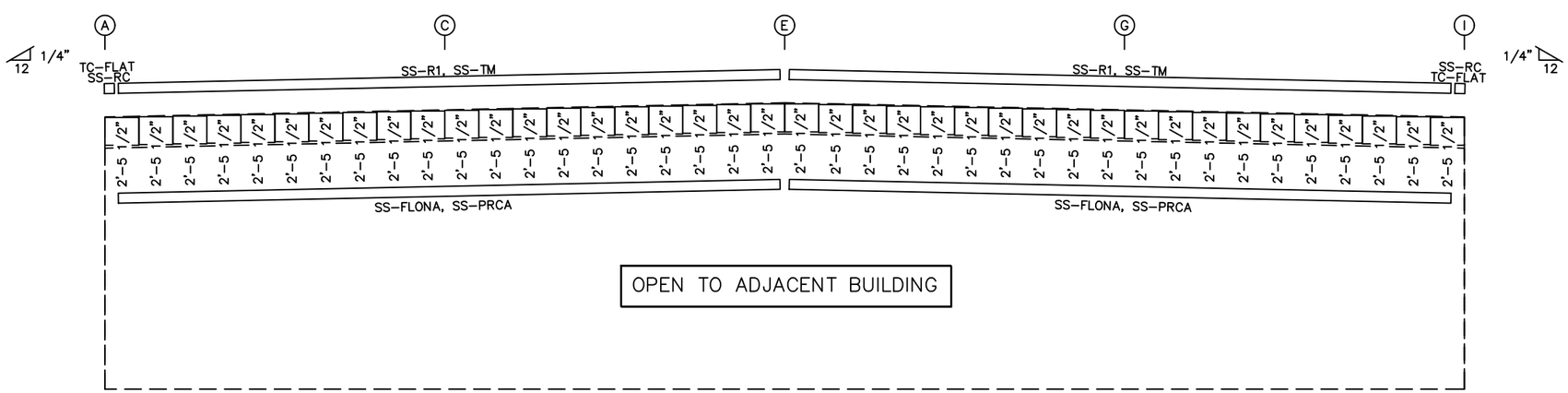

ENDWALL SHEETING & TRIM: FRAME LINE 1.8

PANELS: 26 Ga. R – TBD

BOLT TABLE
FRAME LINE 1.8

LOCATION	QUAN	TYPE	DIA	LENGTH
Columns/Raf	4	A325	3/4"	1 1/2"

MEMBER TABLE
FRAME LINE 1.8

QUAN	MARK	PART	LENGTH
1	EC-100	W1406084	22'-7 1/16"
1	EC-101	W1406084	23'-1 3/4"
1	EC-102	W1406084	22'-7 1/16"

BOLT TABLE
FRAME LINE 1.8

LOCATION	QUAN	TYPE	DIA	LENGTH
Cor_Column/Raf	4	A325	1/2"	1 1/4"
ER-1/ER-2	4	A325	1/2"	1 1/2"
ER-2/ER-3	4	A325	1/2"	1 1/2"
ER-3/ER-4	4	A325	1/2"	1 1/2"

MEMBER TABLE
FRAME LINE 1.8

QUAN	MARK	PART	LENGTH
1	ER-1	W1206043	27'-9 1/16"
1	ER-2	W1206043	30'-0 1/16"
1	ER-3	W1206043	30'-0 1/16"
1	ER-4	W1206043	27'-9 1/16"

FLANGE BRACE TABLE
FRAME LINE 1.8

▽ID	MARK	LENGTH
1	FB2B	1'-7"

TRIM COLORS

EAVE TRIM	= TBD	CORNER TRIM	= TBD
BASE TRIM	= TBD	GUTTER	= TBD
DOOR TRIM	= TBD	DOWNSPOUTS	= TBD
RAKE TRIM	= TBD		

* LINER TRIM = Liner panel color
* SOFFIT TRIM = Soffit panel color

* ONLY APPLICABLE IF LINER TRIM OR SOFFIT PANEL IS INDICATED ON BUILDING ORDER.

GENERAL NOTES:

1. Use TEK5WW screws in place of SD150 panel screws at all 10 gage members.
2. See detail C7A for field coping of coldform endwall column flange braces.
3. All connections to door or window jambs where the clip is not designated in the clip table / drawing are made with JC# clips (#= Girt Depth).

Iron City Structures, LLC
6731 Surlyn Court
Loveland, OH 45140

Engineer: DAZ Approved: DAZ	Date: 11/09/23
Drafter: DAZ	Date: 11/09/23
Detailer:	Date:
Checker:	Date:

☒ FOR PERMIT: THESE DRAWINGS, BEING FOR PERMIT, ARE BY DEFINITION NOT FINAL. ONLY DRAWINGS ISSUED "FOR CONSTRUCTION" CAN BE CONSIDERED AS COMPLETE.

☐ FOR CONSTRUCTION: FINAL DRAWINGS.

REVISION HISTORY

REV.	DESCRIPTION	DATE

PROJECT:
TJB Manufacturing
33600 Liberty Parkway
North Ridgeville, OH 44039

CUSTOMER:
Makena Construction
104 Flat Rock Road
Bellevue, OH 44811

Project# C2203

PAGE: 12

BOLT TABLE FRAME LINE 5				
LOCATION	QUAN	TYPE	DIA	LENGTH
ER-100/ER-101	8	A325	1/2"	1 1/2"
ER-101/ER-102	8	A325	1/2"	1 1/2"
ER-102/ER-103	8	A325	1/2"	1 1/2"
Columns/Raf	2	A325	3/4"	1 3/4"

MEMBER TABLE FRAME LINE 5			
QUAN	MARK	PART	LENGTH
1	EC-103	W10X22	22'-1 9/16"
1	EC-104	W10X22	22'-7 1/4"
1	EC-105	W10X22	23'-1 1/4"
1	EC-106	W10X22	23'-1 1/4"
1	EC-107	W10X22	22'-7 1/4"
1	EC-108	W10X22	22'-1 9/16"
1	ER-100	W12X16	26'-0 1/4"
1	ER-101	W12X16	33'-11 7/8"
1	ER-102	W12X16	33'-11 7/8"
1	ER-103	W12X16	26'-0 1/4"
2	G-100	12X35C10	22'-11 1/2"
3	G-101	12X35C10	23'-11 1/2"
2	JB-100	12X35C16	3'-1"
2	JB-101	12X35C16	3'-7"
1	JB-102	12X35C16	4'-1"
1	CB-100	CABLE375	30'-3 13/16"
1	CB-101	CABLE375	29'-11 13/16"

FLANGE BRACE TABLE FRAME LINE 5		
▽ID	MARK	LENGTH
1	FB101B	1'-7"
2	FB100B	1'-6 1/4"

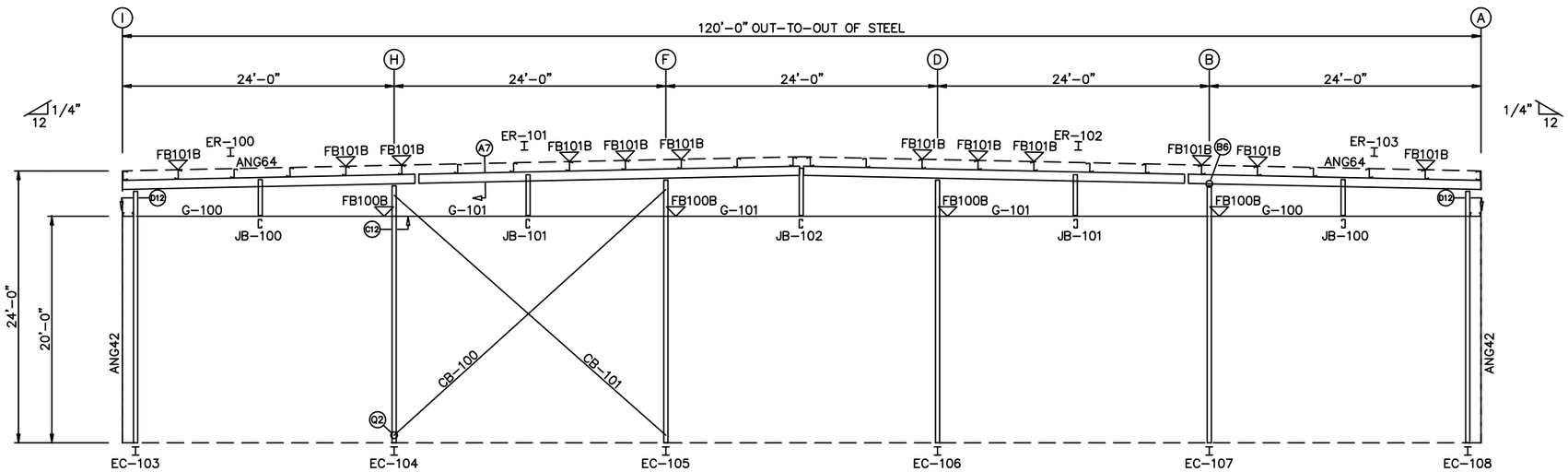

ENDWALL FRAMING: FRAME LINE 5

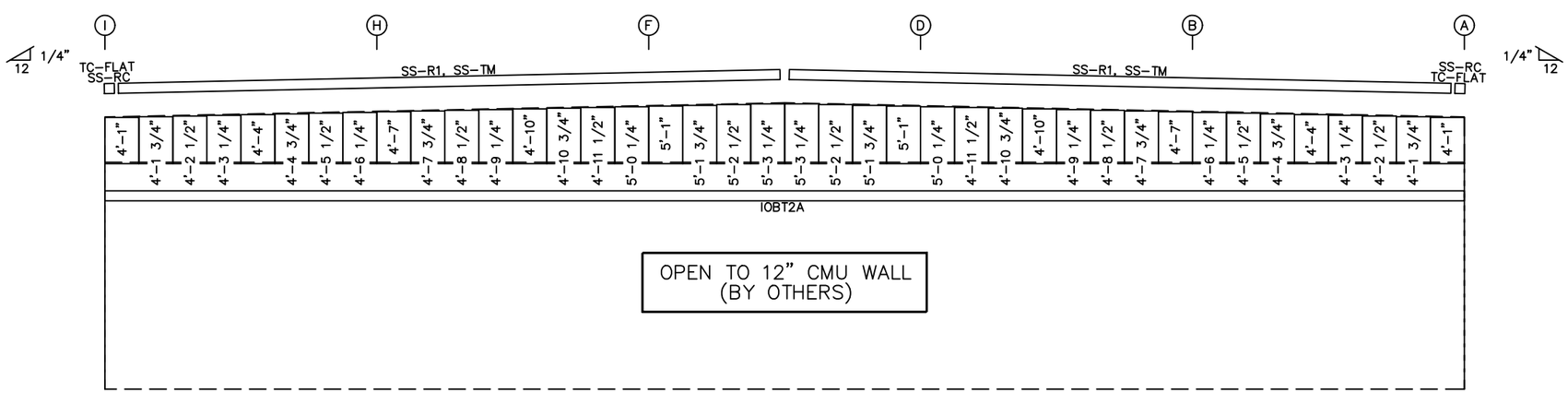

ENDWALL SHEETING & TRIM: FRAME LINE 5

PANELS: 26 Ga. R – TBD

TRIM COLORS	
EAVE TRIM = TBD	CORNER TRIM = TBD
BASE TRIM = TBD	GUTTER = TBD
DOOR TRIM = TBD	DOWNSPOUTS = TBD
RAKE TRIM = TBD	
* LINER TRIM = Liner panel color	
* SOFFIT TRIM = Soffit panel color	

* ONLY APPLICABLE IF LINER TRIM OR SOFFIT PANEL IS INDICATED ON BUILDING ORDER.

GENERAL NOTES:

1. Use TEK5WW screws in place of SD150 panel screws at all 10 gage members.
2. See detail C7A for field coping of coldform endwall column flange braces.
3. All connections to door or window jambs where the clip is not designated in the clip table / drawing are made with JC# clips (#= Girt Depth).

Iron City Structures, LLC
6731 Surlyn Court
Loveland, OH 45140

Engineer: DAZ Approved: DAZ	Date: 11/09/23
Drafter: DAZ	Date: 11/09/23
Detailer:	Date:
Checker:	Date:

☒ FOR PERMIT: THESE DRAWINGS, BEING FOR PERMIT, ARE BY DEFINITION NOT FINAL. ONLY DRAWINGS ISSUED "FOR CONSTRUCTION" CAN BE CONSIDERED AS COMPLETE.

☐ FOR CONSTRUCTION: FINAL DRAWINGS.

REVISION HISTORY

REV.	DESCRIPTION	DATE

PROJECT:
TJB Manufacturing
33600 Liberty Parkway
North Ridgeville, OH 44039

CUSTOMER:
Makena Construction
104 Flat Rock Road
Bellevue, OH 44811

Project# C2203

PAGE: 13

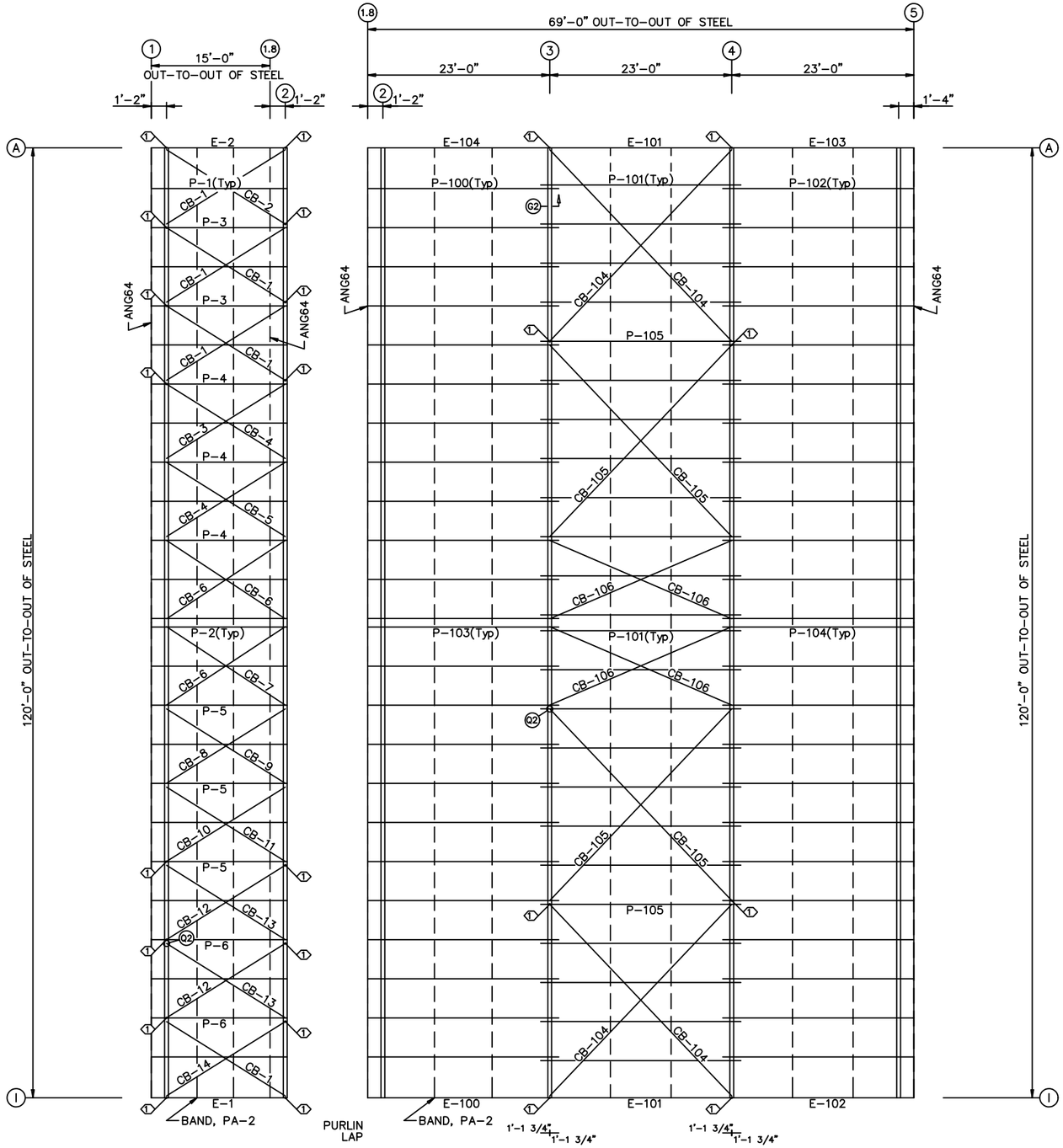

ROOF FRAMING PLAN

MEMBER TABLE
ROOF PLAN

QUAN	MARK	PART	LENGTH
7	P-1	10X25Z14	16'-3 1/2"
7	P-2	10X25Z14	16'-3 1/2"
2	P-3	10X25Z12	16'-3 1/2"
3	P-4	10X25Z13	16'-3 1/2"
3	P-5	10X25Z13	16'-3 1/2"
2	P-6	10X25Z12	16'-3 1/2"
1	E-1	10X35E13	16'-4"
1	E-2	10X35E13	16'-4"
6	CB-1	CABLE500	15'-0 3/16"
1	CB-2	CABLE500	14'-6 7/16"
1	CB-3	CABLE375	15'-2 3/16"
2	CB-4	CABLE375	15'-5 3/16"
1	CB-5	CABLE375	15'-8 1/4"
3	CB-6	CABLE375	15'-9 7/8"
1	CB-7	CABLE375	16'-6 9/16"
1	CB-8	CABLE375	15'-0 9/16"
1	CB-9	CABLE375	16'-1 3/8"
1	CB-10	CABLE375	14'-9 13/16"
1	CB-11	CABLE375	15'-10 1/16"
2	CB-12	CABLE500	14'-4 13/16"
2	CB-13	CABLE500	15'-8 3/8"
1	CB-14	CABLE500	13'-11 3/4"

SPECIAL BOLTS
ROOF PLAN

ID	QUAN	TYPE	DIA	LENGTH	WASH
1	4	A325	1/2"	1 1/4"	0

MEMBER TABLE
ROOF PLAN

QUAN	MARK	PART	LENGTH
12	P-100	10X25Z14	24'-1 1/2"
22	P-101	10X25Z14	25'-3 1/2"
12	P-102	10X25Z14	24'-1 1/2"
12	P-103	10X25Z14	24'-1 1/2"
12	P-104	10X25Z14	24'-1 1/2"
2	P-105	10X25Z13	25'-3 1/2"
1	E-100	10X35E16	22'-11 1/2"
2	E-101	10X35E10	22'-11 1/2"
1	E-102	10X35E16	22'-11 1/2"
1	E-103	10X35E16	22'-11 1/2"
1	E-104	10X35E16	22'-11 1/2"
4	CB-104	CABLE500	29'-10 13/16"
4	CB-105	CABLE375	31'-0 1/4"
4	CB-106	CABLE250	23'-2 5/16"

SPECIAL BOLTS
ROOF PLAN

ID	QUAN	TYPE	DIA	LENGTH	WASH
1	4	A325	1/2"	1 1/4"	0

GENERAL NOTES:

1. Screw Down Roof: Use TEK5WW screws in place of SD150 panel screws at all 10 gage purlins, eave struts, or roof joists.
2. Standing Seam Roof: Use FST#6 in place of FST#1 clip to purlin screws at all 10 gage purlins, eave struts, or at roof joists.

ICS

Iron City Structures, LLC
6731 Surlyn Court
Loveland, OH 45140

Engineer: DAZ Approved: DAZ	Date: 11/09/23
Drafter: DAZ	Date: 11/09/23
Detailer:	Date:
Checker:	Date:

☒ FOR PERMIT: THESE DRAWINGS, BEING FOR PERMIT, ARE BY DEFINITION NOT FINAL. ONLY DRAWINGS ISSUED "FOR CONSTRUCTION" CAN BE CONSIDERED AS COMPLETE.

☐ FOR CONSTRUCTION: FINAL DRAWINGS.

REVISION HISTORY

REV.	DESCRIPTION	DATE

PROJECT:
TJB Manufacturing
33600 Liberty Parkway
North Ridgeville, OH 44039

CUSTOMER:
Makena Construction
104 Flat Rock Road
Bellevue, OH 44811

Project# C2203

PAGE: 14

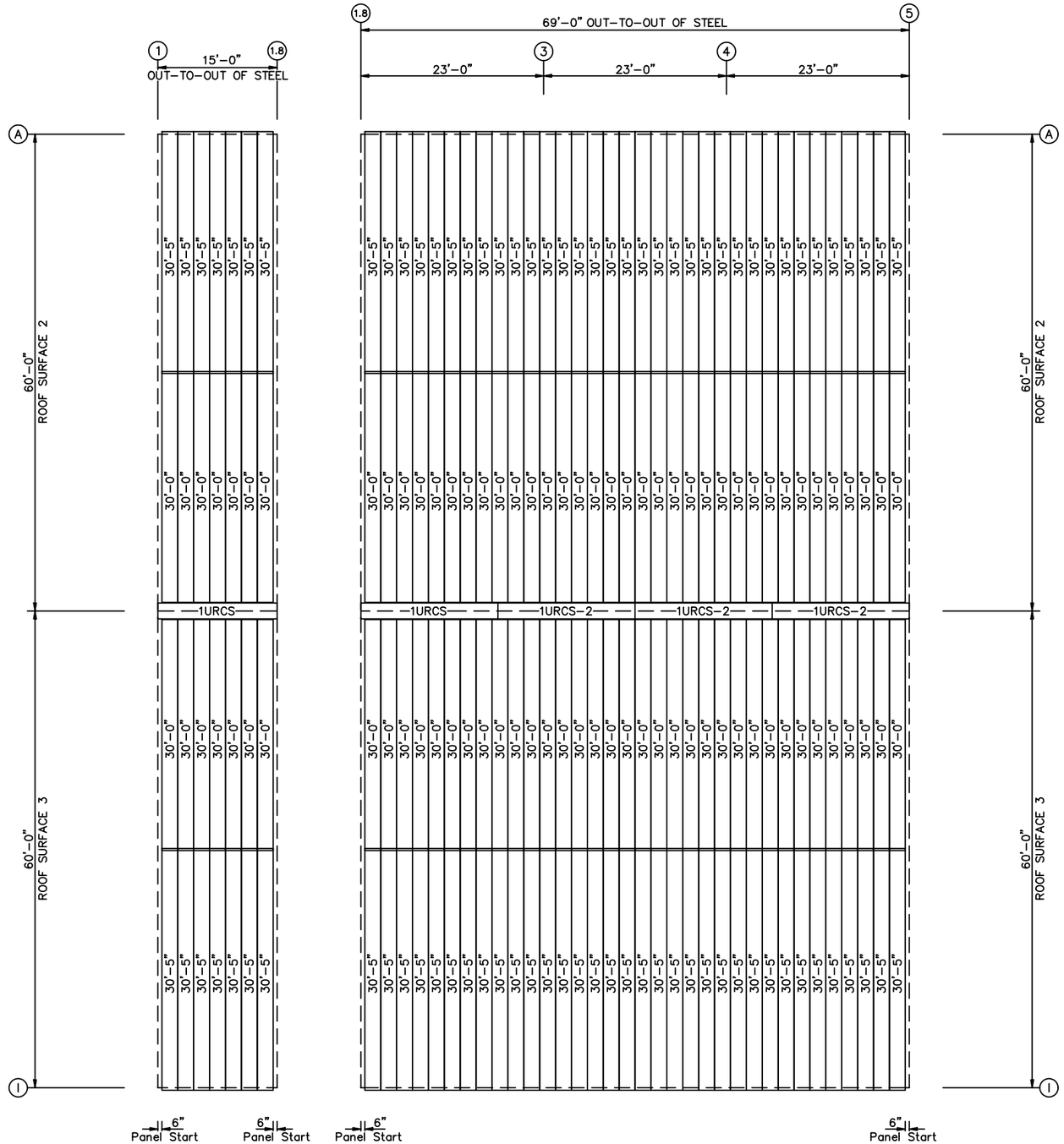

ROOF SHEETING PLAN

PANELS: 24 Ga. L4 – Galvalume

GENERAL NOTES:

Panel "Start" and "End" dimensions must be followed for the proper installation of the gable trim(s) provided.

Iron City Structures, LLC
6731 Surlyn Court
Loveland, OH 45140

Engineer: DAZ Approved: DAZ	Date: 11/09/23
Drafter: DAZ	Date: 11/09/23
Detailer:	Date:
Checker:	Date:

☒ FOR PERMIT:
THESE DRAWINGS, BEING FOR PERMIT, ARE BY DEFINITION, NOT FINAL. ONLY DRAWINGS ISSUED "FOR CONSTRUCTION" CAN BE CONSIDERED AS COMPLETE.

☐ FOR CONSTRUCTION:
FINAL DRAWINGS.

REVISION HISTORY

REV.	DESCRIPTION	DATE

PROJECT:
TJB Manufacturing
33600 Liberty Parkway
North Ridgeville, OH 44039

CUSTOMER:
Makena Construction
104 Flat Rock Road
Bellevue, OH 44811

Project# C2203

PAGE: 15

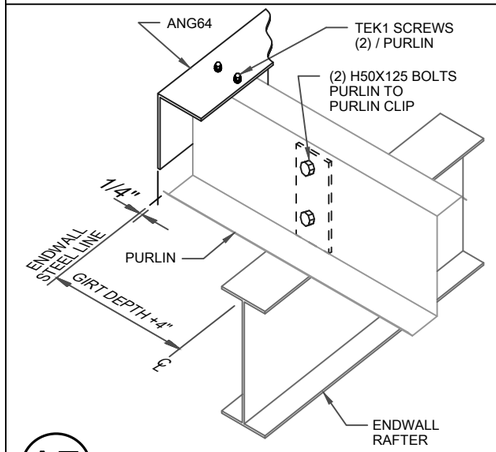

A7 PURLIN TO ENDWALL RAFTER CONNECTION

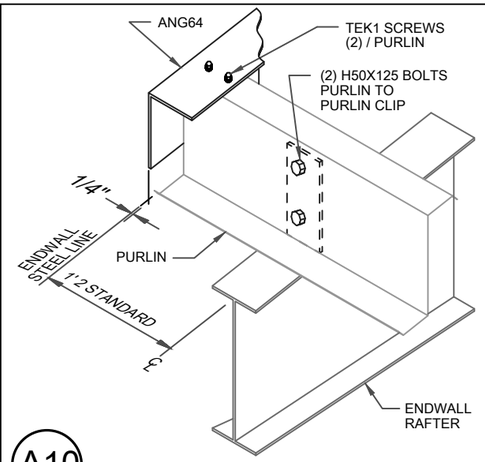

A10 PURLIN TO RIGID FRAME ENDWALL RAFTER CONNECTION

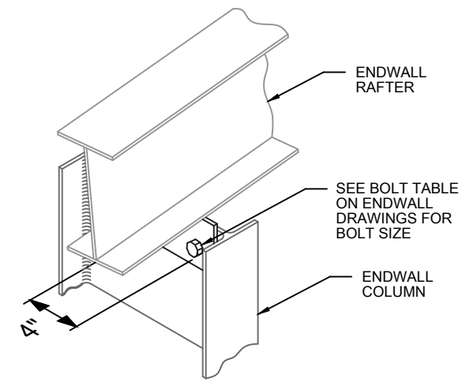

B6 ENDWALL COLUMN TO RAFTER CONNECTION

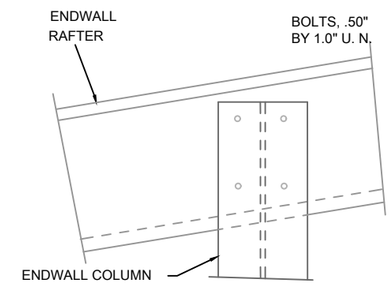

B9 ENDWALL RAFTER TO COLUMN

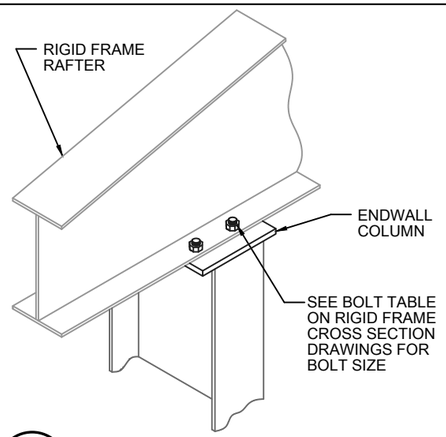

B20 ENDWALL COLUMN TO RIGID FRAME RAFTER CONNECTION (BYPASS GIRTS)

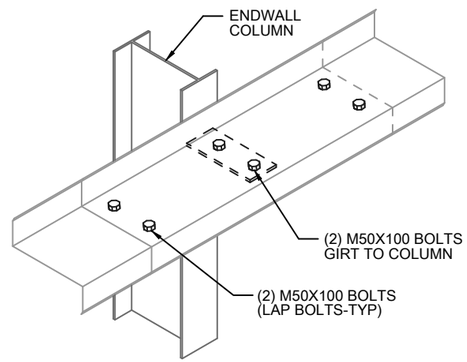

C12 GIRT TO ENDWALL COLUMN

NOTE #1: FIELD NOTCHING OF GIRTS WILL BE REQUIRED WHEN GIRT ELEVATIONS ARE NOT THE SAME FROM WALL TO WALL.

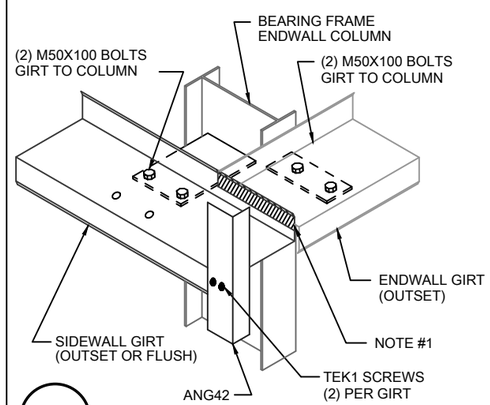

D12 BEARING FRAME CORNER COLUMN TO BYPASS ENDWALL GIRT

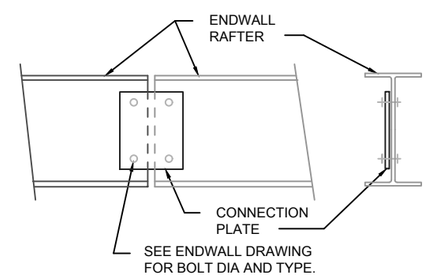

F3 RAFTER SPLICE ALONG SURFACE

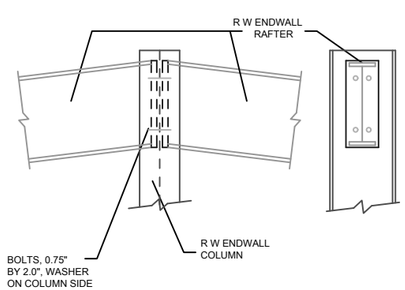

F38 RAFTER SPLICE AT SURFACE CHANGE WITH COLUMN SUPPORT

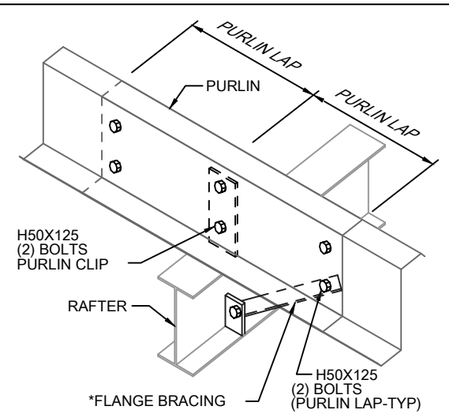

*MAY BE NEAR SIDE, FAR SIDE, OR BOTH

G2 ROOF PURLIN TO INTERIOR FRAME RAFTER

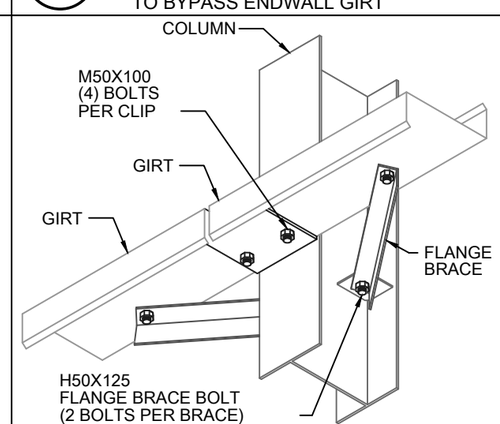

H4 GIRT TO COLUMN - OUTSET GIRTS

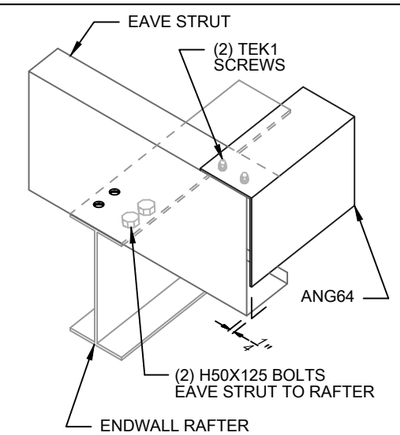

I8 EAVE STRUT TO ENDWALL RAFTER LOW EAVE

ICS

Iron City Structures, LLC
6731 Surlyn Court
Loveland, OH 45140

Engineer: DAZ Approved: DAZ	Date: 11/09/23
Drafter: DAZ	Date: 11/09/23
Detailer:	Date:
Checker:	Date:

☒ FOR PERMIT: THESE DRAWINGS, BEING FOR PERMIT, ARE BY DEFINITION, NOT FINAL. ONLY DRAWINGS ISSUED "FOR CONSTRUCTION" CAN BE CONSIDERED AS COMPLETE.

☐ FOR CONSTRUCTION: FINAL DRAWINGS.

REVISION HISTORY

REV.	DESCRIPTION	DATE

PROJECT:
TJB Manufacturing
33600 Liberty Parkway
North Ridgeville, OH 44039

CUSTOMER:
Makena Construction
104 Flat Rock Road
Bellevue, OH 44811

Project# C2203

PAGE: 16

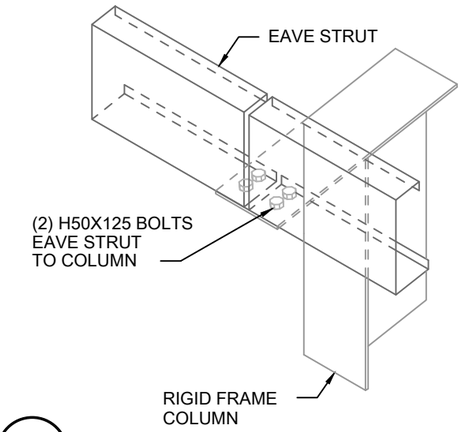

J2 EAVE STRUT TO RIGID FRAME BYPASS GIRT CONDITION

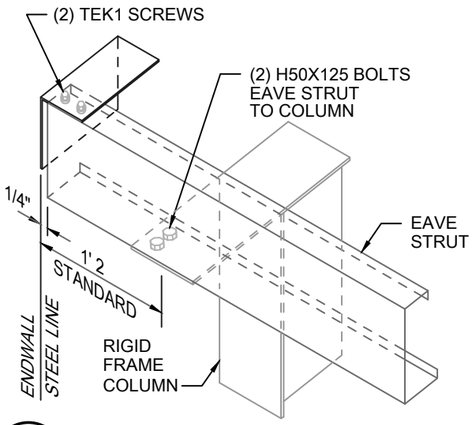

J24 EAVE STRUT TO RIGID FRAME IN ENDWALL - BYPASS GIRTS LOW EAVE

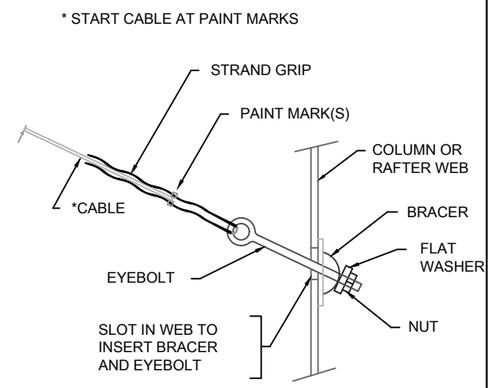

Q2 CABLE BRACE / EYEBOLT

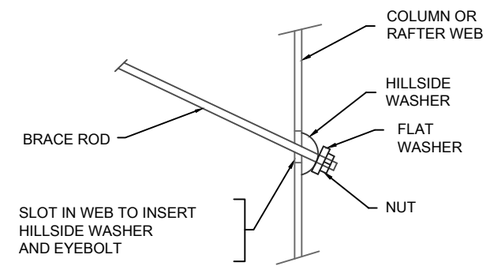

Q3 DIAGONAL BRACE ROD, NUT END

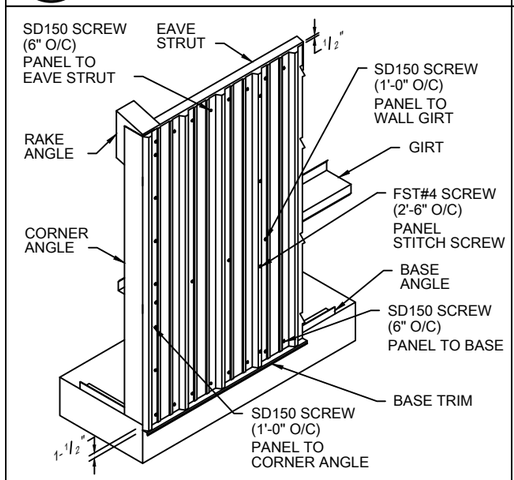

"R" PANEL SIDEWALL

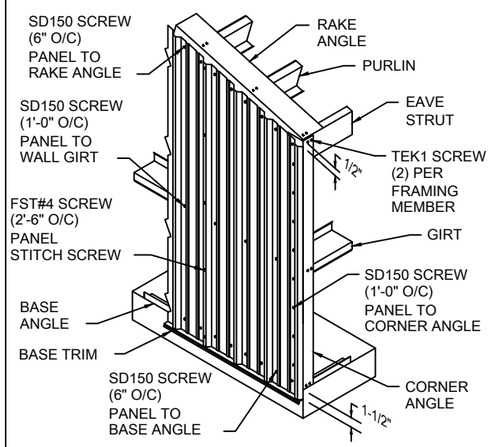

"R" PANEL ENDWALL

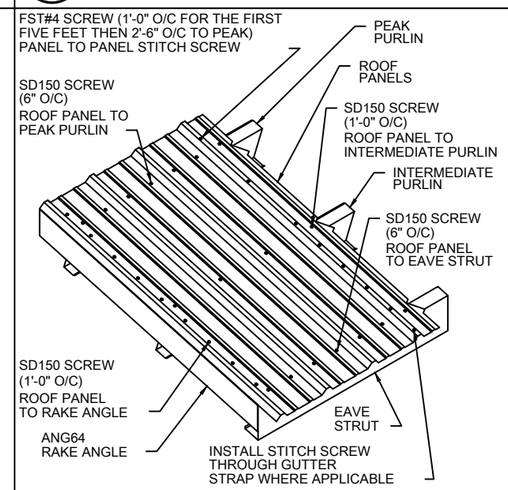

ROOF FASTENER APPLICATION

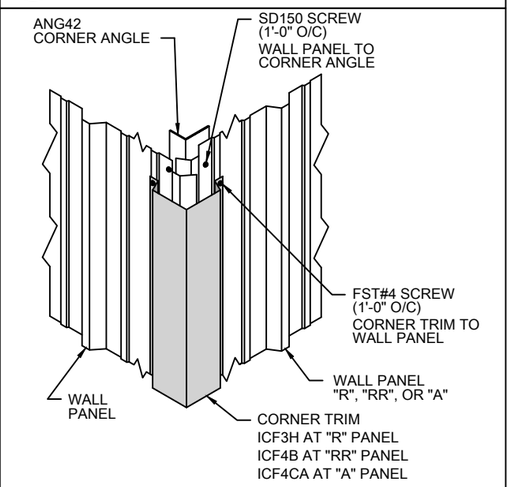

CORNER TRIM

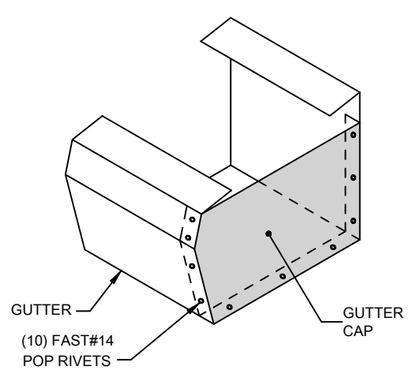

GUTTER CAP INSTALLATION

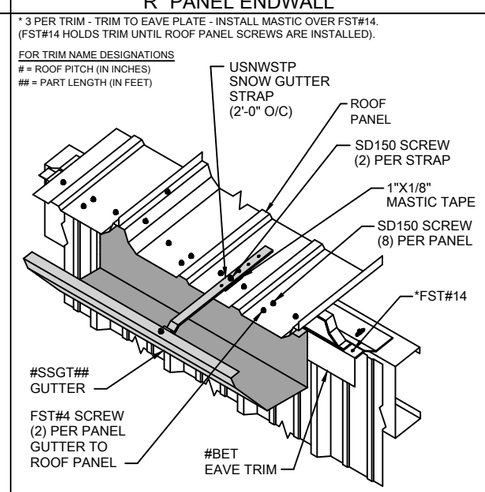

SNOW GUTTER

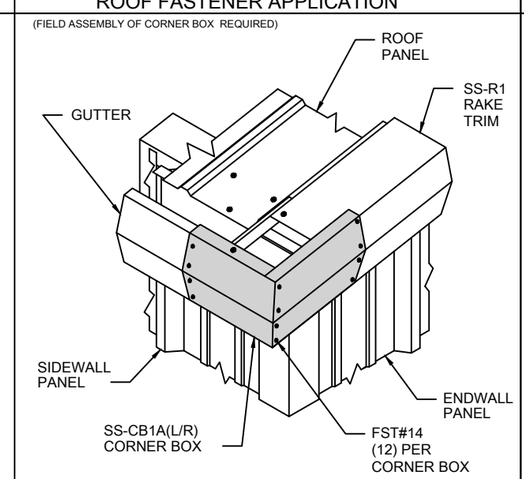

CORNER BOX INSTALLATION

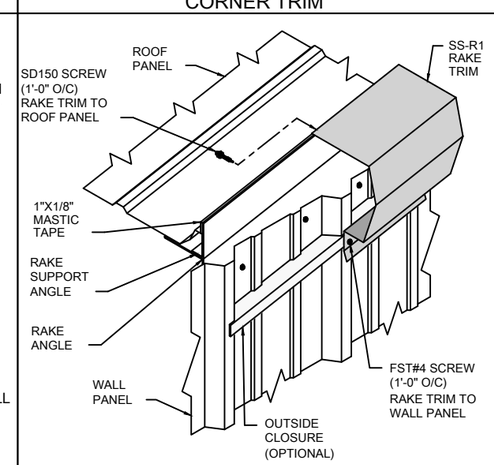

RAKE TRIM
(ROOF SURFACES <= 90' 0 EAVE TO PEAK)

Iron City Structures, LLC
6731 Surlyn Court
Loveland, OH 45140

Engineer: DAZ Approved: DAZ	Date: 11/09/23
Drafter: DAZ	Date: 11/09/23
Detailer:	Date:
Checker:	Date:

☒ FOR PERMIT: THESE DRAWINGS, BEING FOR PERMIT, ARE BY DEFINITION, NOT FINAL. ONLY DRAWINGS ISSUED "FOR CONSTRUCTION" CAN BE CONSIDERED AS COMPLETE.

☐ FOR CONSTRUCTION: FINAL DRAWINGS.

REVISION HISTORY

REV.	DESCRIPTION	DATE

PROJECT:
TJB Manufacturing
33600 Liberty Parkway
North Ridgeville, OH 44039

CUSTOMER:
Makena Construction
104 Flat Rock Road
Bellevue, OH 44811

Project# C2203

PAGE: 17

*CAN BE SEAM-LOK OR VERTICAL-LOK
**SEAM-LOK ROOF ONLY

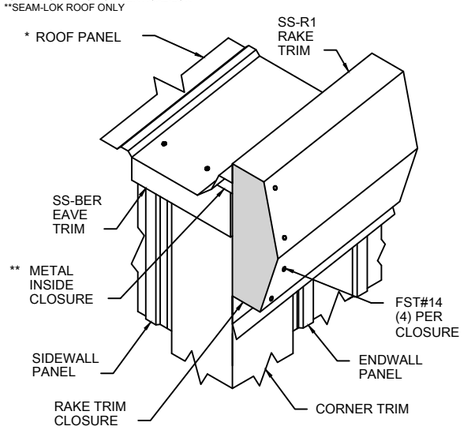

RAKE CLOSURE

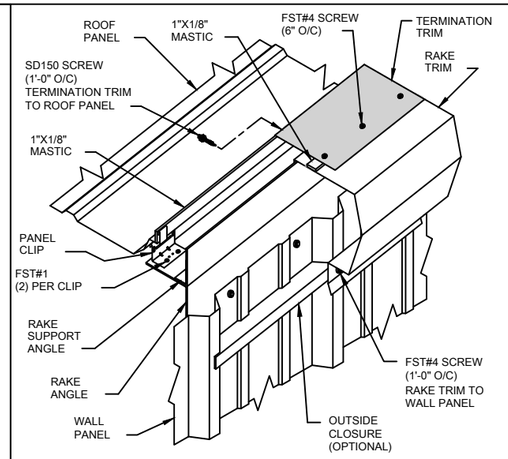

TERMINATION TRIM

* SIDEWALL PANEL NOT SHOWN FOR CLARITY
** FIELD NOTCH RETURN LEG AT TERMINATION CLOSURE

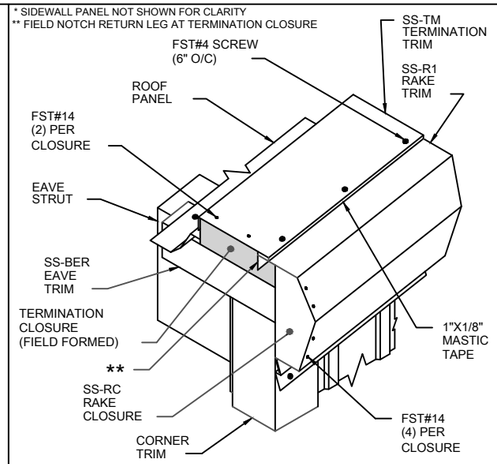

TERMINATION TRIM CLOSURE

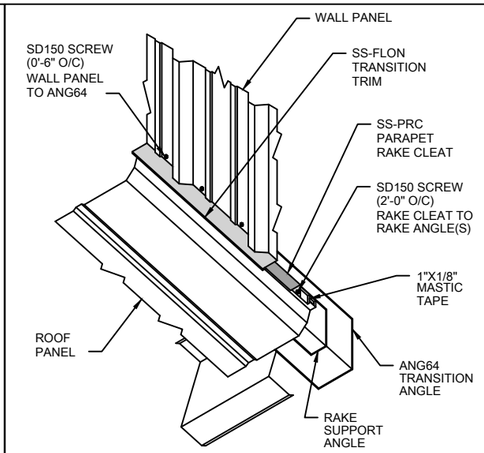

ROOF - WALL (PARALLEL) TRANSITION
FLOATING - STARTING / ENDING ON MODULE

NOTE(S):
1) INSTALL THE RIDGE FLASHING STARTING AND ENDING 2-1/2" OUTSIDE THE STEEL LINE.
2) LEAVE 6" UNFASTENED ON EACH END TO ALLOW THE RAKE TRIM TO BE INSTALLED LATER.
3) DO NOT INSTALL THE FST#4 SCREWS FOR THE RIDGE CAP THROUGH THE LOCK OF THE STANDING SEAM.

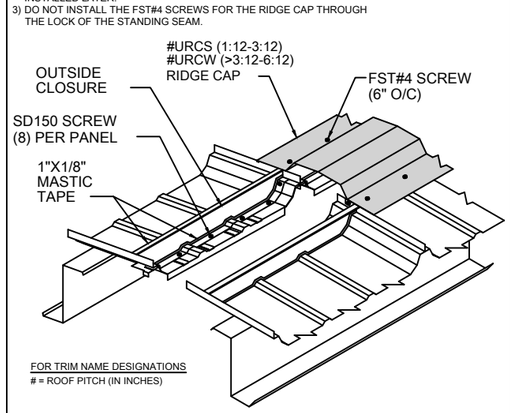

RIDGE CAP TRIM

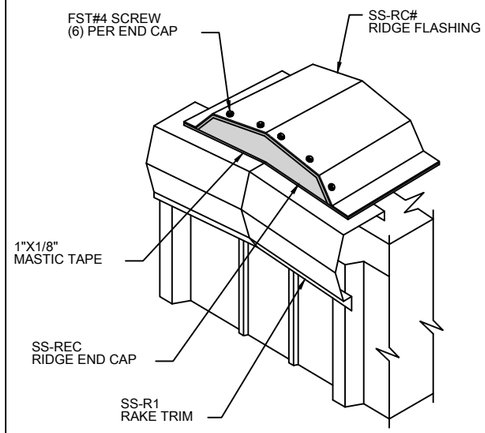

RIDGE CAP END CLOSURE

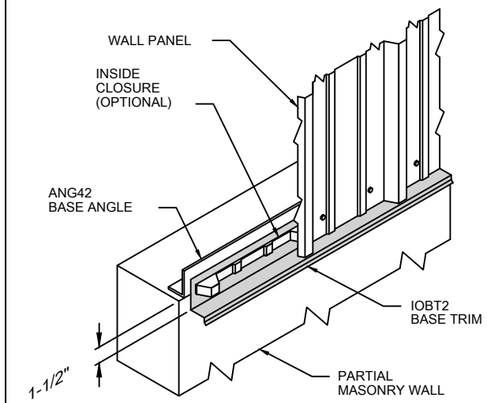

BASE TRIM AT PARTIAL WALL

Iron City Structures, LLC
6731 Surlyn Court
Loveland, OH 45140

Engineer: DAZ Approved: DAZ	Date: 11/09/23
Drafter: DAZ	Date: 11/09/23
Detailer:	Date:
Checker:	Date:

☒ FOR PERMIT: THESE DRAWINGS, BEING FOR PERMIT, ARE BY DEFINITION NOT FINAL, ONLY DRAWINGS ISSUED "FOR CONSTRUCTION" CAN BE CONSIDERED AS COMPLETE.

☐ FOR CONSTRUCTION: FINAL DRAWINGS.

REVISION HISTORY

REV.	DESCRIPTION	DATE

PROJECT:
TJB Manufacturing
33600 Liberty Parkway
North Ridgeville, OH 44039

CUSTOMER:
Makena Construction
104 Flat Rock Road
Bellevue, OH 44811

Project# C2203

PAGE: 18

Iron City Structures LLC
bruce@ironcitystructures.com Bruce Gillan 740.507.5898

Color Selection Guide Featuring TRINAR®

SLATE BLUE

ARCTIC WHITE *

CHARCOAL GRAY

BUCKSKIN TAN *

BURNISHED SLATE

PARCHMENT *

EVERGREEN

ASH GRAY *

ANTIQUE RED *

CHOCOLATE BROWN

HARBOR BLUE

LIGHT STONE *

TRINAR® 70% PVDF Fluoropolymer

This tough, flexible, strongly-bonded finish provides the following benefits:

- Excellent UV resistance • Excellent heat resistance • Excellent chemical resistance
- Uses only the highest quality ceramic and inorganic pigments for the finest metal finish available
- Unparalleled gloss and color retention • Resists chalking, fading, chipping and cracking • Resists staining due to airborne pollutants

AkzoNobel

** TRINAR® CC colors, formulated in TRINAR's® COOL CHEMISTRY® Series, contain ceramic infrared reflective pigments which are designed to reflect infrared energy and comply with Energy Star guidelines.*

All TRINAR® colors featured in the Color Selection Guide include a 40-year limited warranty.

DESIGN CRITERIA

Building Code:	IBC 2015
Local Code (State/Prov):	OBC 2017
Dead Load (psf):	2.250
Collateral Load (psf):	3.00
Roof Live Load (psf):	20.00
Frame Live Load (psf):	12.00

Snow:

Ground Snow Load (psf):	30.00
Snow Importance:	1.00
Thermal Coefficient:	1.00
Snow Exposure Factor:	1.00
Slippery Roof:	Y
Roof Snow Load (psf):	21
Snow Drift:	28.2psf & 12.6ft

Wind:

Ultimate Wind Speed (mph):	115 mph
Occupancy Category:	II
Importance Wind:	N/A
Wind Exposure:	C
Enclosure Classification:	C

Seismic:

Seismic Importance:	1.00
Occupancy Category:	II
Site Class:	D
Seismic Design Category:	B
Mapped Spectral Acceleration for Short Period, Ss	0.1430
Mapped Spectral Acceleration for Period of 1s, S1	0.0550

RECEIVED
JUN 1 1 2024

TJB Manufacturing
33600 Liberty Parkway
North Ridgeville, OH 44039

Project # C2203

CUSTOMER:

Makena Construction
104 Flat Rock Road
Bellevue, OH 44811

☒ FOR PERMIT:
THESE DRAWINGS, BEING FOR PERMIT, ARE BY DEFINITION NOT FINAL. ONLY DRAWINGS ISSUED "FOR CONSTRUCTION" CAN BE CONSIDERED AS COMPLETE.

☐ FOR CONSTRUCTION:
FINAL DRAWINGS.

ICS
Iron City Structures, LLC
6731 Surlyn Court
Loveland, OH 45140
www.ironcitystructures.com

Engineer: DAZ Approved: DAZ	Date: 11/09/23
Drafter: DAZ	Date: 11/09/23
Detailer:	Date:
Checker:	Date:

REVISION #	DATE

STATE OF OHIO
DAVID ZUSINAS
E-84232
REGISTERED PROFESSIONAL ENGINEER
11/09/2023
PROFESSIONAL ENGINEER

INDEX OF DRAWINGS

Page	Drawing Title
	Cover Page
1	Specifications
2	Anchor Bolt Plan
3	Base Plate Reactions Bldg. A
4	Base Plate Reactions Bldg. B
5	Base Plate Details
6	Rigid Frame F.L. 1
7	Rigid Frame F.L. 2
8	Rigid Frames F.L. 3 & 4
9	Sidewall Framing & Sheeting F.L. A
10	Sidewall Framing & Sheeting F.L. I
11	Endwall Framing & Sheeting F.L. 1
12	Endwall Framing & Sheeting F.L. 1.8
13	Endwall Framing & Sheeting F.L. 5
14	Roof Framing Plan
15	Roof Sheeting Plan
16	Details
17	Details
18	Details

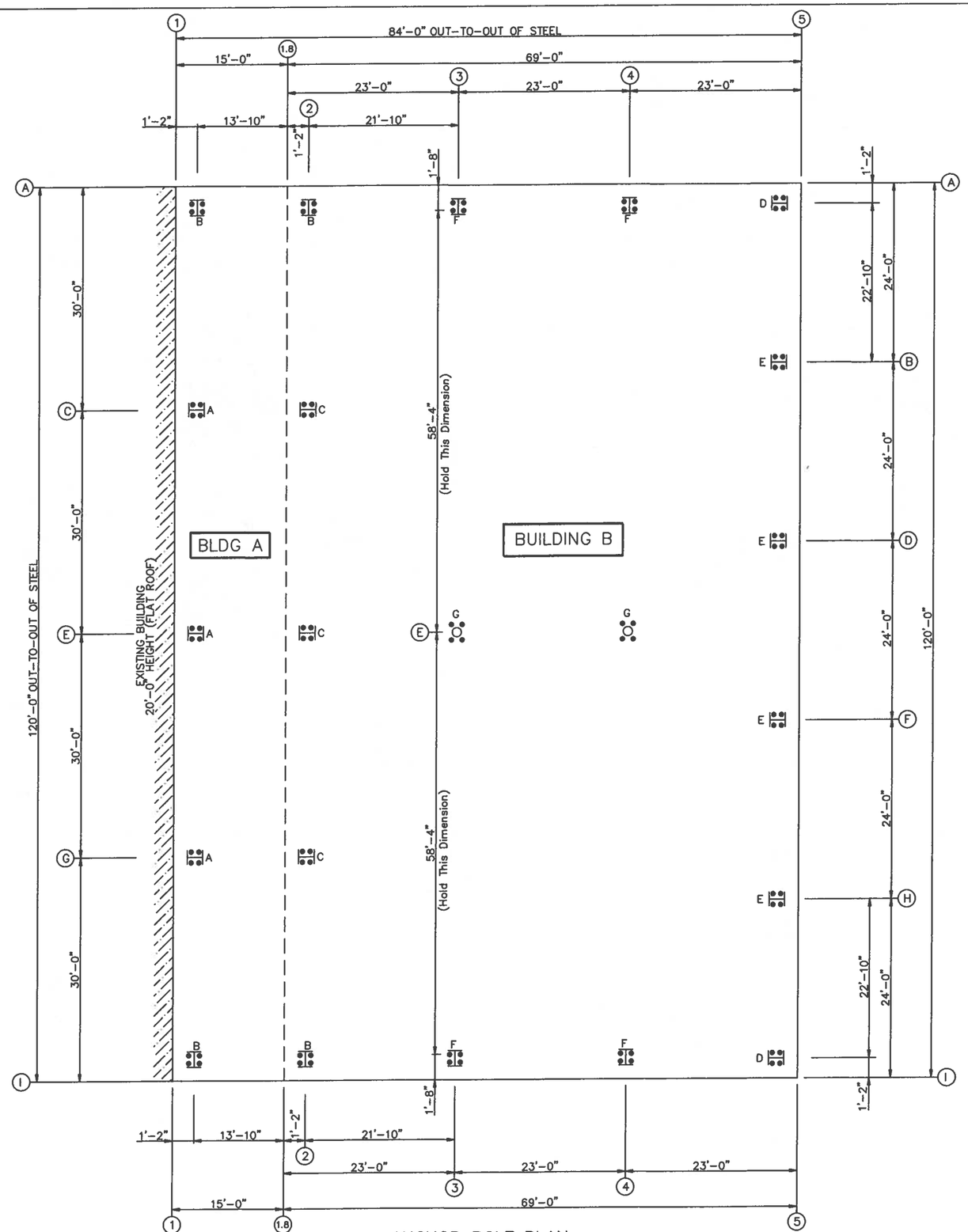

ANCHOR BOLT PLAN

NOTE: All Base Plates @ 100'-0" (U.N.)

Iron City Structures, LLC
6731 Surlyn Court
Loveland, OH 45140

Engineer: DAZ Approved: DAZ	Date: 11/09/23
Drafter: DAZ	Date: 11/09/23
Detailer:	Date:
Checker:	Date:

☒ FOR PERMIT: THESE DRAWINGS, BEING FOR PERMIT, ARE BY DEFINITION NOT FINAL. ONLY DRAWINGS ISSUED "FOR CONSTRUCTION" CAN BE CONSIDERED AS COMPLETE.

☐ FOR CONSTRUCTION: FINAL DRAWINGS.

REVISION HISTORY

REV.	DESCRIPTION	DATE

PROJECT:
TJB Manufacturing
33600 Liberty Parkway
North Ridgeville, OH 44039

CUSTOMER:
Makena Construction
104 Flat Rock Road
Bellevue, OH 44811

Project# C2203

PAGE: 2

DESIGN INFORMATION

1. All loading conditions are examined and only the maximum / minimum H or V and the corresponding H or V are reported.
2. Positive reactions are shown in the sketch. Foundation loads are in opposite directions.
3. Bracing reactions are in the plane of the brace with the H pointing away from the braced bay. The vertical reaction is downward.
4. Building reactions are based on the following building data:

DESIGN CRITERIA

Width (ft)	=120
Length (ft)	=15
Eave Height (ft)	=21.25
Roof Slope (rise/12)	=0.25:12
Building Code	=IBC 2015
Local Code (State/Prov)	=OBC 2017
Dead Load (psf)	=2.250
Collateral Load (psf)	=3.00
Roof Live Load (psf)	=20.00
Frame Live Load (psf)	=12.00
Snow:	
Ground Snow Load (psf)	=30.00
Snow Importance	=1.00
Thermal Coefficient	=1.00
Snow Exposure Factor	=1.0000
Slippery Roof	=Y
Roof Snow Load, Pf (psf)	=21
Min Roof Snow Load, Pmin (psf)	=20.00
Snow Drift Load	= 28.2psf & 12.6ft
Wind:	
Ultimate Wind Speed (mph)	=115 mph
Risk Category	=II
Importance - Wind	=N/A
Wind Exposure	=C
Enclosure Classification	=C
--Internal Pressure Coefficients--	
Pressure	=0.18
Suction	=-0.18
----Components & Cladding----	
Design Pressure:	
Pressure (psf)	=28.28
Suction (psf)	=-51.85

Equivalent Lateral Brace Force Procedure.

Steel systems not specifically detailed for seismic resistance.

SEISMIC CRITERIA

Seismic Importance	= 1.00
Risk Category	= II
Mapped Spectral Response Accelerations	
Ss	=0.1430
S1	=0.0550
---Spectral Response Coefficients---	
Sds	=0.1525
Sd1	=0.0880
Site Class	=D
Seismic Design Category	=B
------Base Shear------	
Expanded Formula	= 0.667*Ie*Fa*Ss*W/R
Longitudinal Base Shear	(k) = 1.16
Transverse Base Shear	(k) = 2.82
--Seismic Response Coefficients--	
Frame	=0.051
FSW	=
BSW	=
--Response Modification Factors--	
Frame	=3
FSW	=
BSW	=

DEFLECTION LIMITS

ENDWALL COLUMN L/ 120
ENDWALL RAFTER (Live) L/ 180
ENDWALL RAFTER (Wind) L/ 180
WALL GIRTS L/ 240
PURLIN (LIVE) L/ 180
PURLIN (WIND) L/ 180
WALL PANEL L/ 60
ROOF PANEL (Live) L/ 60
ROOF PANEL (Wind) L/ 60
Main Frame (Horiz) H/ 100
Main Frame (Vert) L/ 180
WIND BRACING H/ 100
Main Frame (Crane) H/ 100
Main Frame (Seismic) H/ 50
SEISMIC BRACING H/ 50
PARTITION COLUMN L/ 120
PARTITION GIRT L/ 120
PARTITION PANEL L/ 120

BUILDING A

ENDWALL COLUMN: BASIC COLUMN REACTIONS (k)

Frm Line	Col Line	Dead Vert	Collat Vert	Live Vert	Snow Vert	Snow Drift Vert	Wind Left1 Vert	Wind Right1 Vert	Wind Left2 Vert	Wind Right2 Vert	Wind Long1 Vert	Wind Long2 Vert	Seis Left Vert
2	G	1.1	0.7	4.6	5.0	4.0	-4.1	-2.7	0.2	0.2	-6.6	0.2	0.0
2	E	1.1	0.7	4.7	5.1	4.0	-2.9	-2.9	0.1	0.1	-6.6	0.2	0.0
2	C	1.1	0.7	4.6	5.0	4.0	-2.7	-4.1	0.2	0.2	-6.6	0.2	0.0

Frm Line	Col Line	Seis Right Vert	-MIN_SNOW-- Horz	Vert
2	G	0.0	0.0	4.7
2	E	0.0	0.0	4.8
2	C	0.0	0.0	4.7

ENDWALL COLUMN: ANCHOR BOLTS & BASE PLATES

Frm Line	Col Line	Anc._Bolt Qty	Dia	Base_Plate (in) Width	Length	Thick	Grout (in)
2	G	4	0.750	6.000	14.00	0.500	0.0
2	E	4	0.750	8.000	14.00	0.500	0.0
2	C	4	0.750	6.000	14.00	0.500	0.0

FRAME LINES: 1

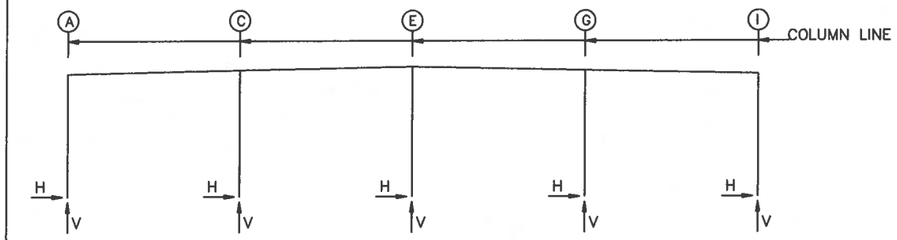

RIGID FRAME: BASIC COLUMN REACTIONS (k)

Frame Line	Column Line	Dead Horz	Dead Vert	Collateral Horz	Collateral Vert	Live Horz	Live Vert	Snow Horz	Snow Vert	Snow_Drift Horz	Snow_Drift Vert	Wind_Left1 Horz	Wind_Left1 Vert
1	A	0.1	0.8	0.1	0.4	0.2	1.5	0.4	2.7	0.1	0.8	-2.5	-4.1
1	I	-0.1	0.8	-0.1	0.4	-0.2	1.5	-0.4	2.7	-0.1	0.8	-1.6	-0.6
1	C	0.0	1.5	0.0	0.8	0.0	3.3	0.0	5.8	0.0	1.6	0.0	-3.9
1	E	0.0	1.5	0.0	0.8	0.0	3.2	0.0	5.6	0.0	1.6	0.0	-2.9
1	G	0.0	1.5	0.0	0.8	0.0	3.3	0.0	5.8	0.0	1.6	0.0	-4.2

Frame Line	Column Line	Wind_Right1 Horz	Wind_Right1 Vert	Wind_Left2 Horz	Wind_Left2 Vert	Wind_Right2 Horz	Wind_Right2 Vert	Wind_Long1 Horz	Wind_Long1 Vert	Wind_Long2 Horz	Wind_Long2 Vert	Seismic_Left Horz	Seismic_Left Vert
1	A	1.6	-0.6	-2.9	-0.7	1.2	1.2	1.1	-3.8	0.9	0.0	-0.7	-0.6
1	I	2.5	-4.1	-1.2	1.2	2.9	-0.7	-1.1	-3.8	-0.9	0.0	-0.7	0.6
1	C	0.0	-4.2	0.0	1.2	0.0	-1.1	0.0	-7.5	0.0	0.3	0.0	0.8
1	E	0.0	-2.9	0.0	0.2	0.0	0.2	0.0	-7.4	0.0	0.2	0.0	0.0
1	G	0.0	-3.9	0.0	-1.1	0.0	1.2	0.0	-7.5	0.0	0.3	0.0	-0.8

Frame Line	Column Line	Seismic_Right Horz	Seismic_Right Vert	Wind_Left3 Horz	Wind_Left3 Vert	Wind_Right3 Horz	Wind_Right3 Vert	Wind_Left4 Horz	Wind_Left4 Vert	Wind_Right4 Horz	Wind_Right4 Vert	-MIN_SNOW-- Horz	Vert
1	A	0.7	0.6	-2.3	-2.1	1.8	-0.1	-3.0	-2.7	1.0	0.7	0.3	2.6
1	I	0.7	-0.6	-1.8	-0.1	2.3	-2.1	-1.0	0.7	3.0	-2.7	-0.3	2.6
1	C	0.0	-0.8	0.0	-1.3	0.0	-3.6	0.0	-1.4	0.0	-1.7	0.0	5.6
1	E	0.0	0.0	0.0	-2.3	0.0	-2.3	0.0	-0.4	0.0	-0.4	0.0	5.3
1	G	0.0	0.8	0.0	-3.6	0.0	-1.3	0.0	-1.7	0.0	-1.4	0.0	5.6

BUILDING BRACING REACTIONS

Wall Loc	Col Line	Col Line	Reactions in plane of wall ± Reactions(k) Wind Horz	Wind Vert	Seismic Horz	Seismic Vert	Panel_Shear (lb/ft) Wind	Seis	Note
L_EW	1								(h)
F_SW	I								(f)
R_EW	2								(f)
B_SW	A								(f)

(f)Bracing loads are applied to the adjacent building
(h)Rigid frame at endwall

Reactions for seismic represent shear force, Eh

RIGID FRAME: ANCHOR BOLTS & BASE PLATES

Frm Line	Col Line	Anc._Bolt Qty	Dia	Base_Plate (in) Width	Length	Thick	Grout (in)
1	A	4	0.750	8.000	11.50	0.500	0.0
1	I	4	0.750	8.000	11.50	0.500	0.0
1	C	4	0.750	10.00	10.19	0.750	0.0
1	E	4	0.750	10.00	10.19	0.750	0.0
1	G	4	0.750	10.00	10.19	0.750	0.0

ICS
Iron City Structures, LLC
6731 Surlyn Court
Loveland, OH 45140

Engineer: DAZ Approved: DAZ	Date: 11/09/23
Drafter: DAZ	Date: 11/09/23
Detailer:	Date:
Checker:	Date:

☒ FOR PERMIT: THESE DRAWINGS, BEING FOR PERMIT, ARE BY DEFINITION NOT FINAL. ONLY DRAWINGS ISSUED "FOR CONSTRUCTION" CAN BE CONSIDERED AS COMPLETE.
☐ FOR CONSTRUCTION: FINAL DRAWINGS.

REVISION HISTORY

REV.	DESCRIPTION	DATE

PROJECT:
TJB Manufacturing
33600 Liberty Parkway
North Ridgeville, OH 44039

CUSTOMER:
Makena Construction
104 Flat Rock Road
Bellevue, OH 44811

Project# C2203

PAGE: 3

DESIGN INFORMATION

1. All loading conditions are examined and only the maximum / minimum H or V and the corresponding H or V are reported.
2. Positive reactions are shown in the sketch. Foundation loads are in opposite directions.
3. Bracing reactions are in the plane of the brace with the H pointing away from the braced bay. The vertical reaction is downward.
4. Building reactions are based on the following building data:

DESIGN CRITERIA

Width (ft)	=120
Length (ft)	=69
Eave Height (ft)	=24
Roof Slope (rise/12)	=0.25:12
Building Code	=IBC 2015
Local Code (State/Prov)	=OBC 2017
Dead Load (psf)	=2.250
Collateral Load (psf)	=3.00
Roof Live Load (psf)	=20.00
Frame Live Load (psf)	=12.00
Snow:	
Ground Snow Load (psf)	=30.00
Snow Importance	=1.00
Thermal Coefficient	=1.00
Snow Exposure Factor	=1.0000
Slippery Roof	=Y
Roof Snow Load, Pf (psf)	=21
Min Roof Snow Load, Pmin (psf)	=20.00
Snow Drift Load =	=N/A
Wind:	
Ultimate Wind Speed (mph)	=115 mph
Risk Category	=II
Importance - Wind	=N/A
Wind Exposure	=C
Enclosure Classification	=C
--Internal Pressure Coefficients--	
Pressure	=0.18
Suction	=-0.18
----Components & Cladding----	
Design Pressure:	
Pressure (psf)	=28.97
Suction (psf)	=-38.55

Equivalent Lateral Brace Force Procedure.

Steel systems not specifically detailed for seismic resistance.

SEISMIC CRITERIA

Seismic Importance	= 1.00
Risk Category	= II
Mapped Spectral Response Accelerations	
Ss	=0.1430
S1	=0.0550
---Spectral Response Coefficients---	
Sds	=0.1525
Sd1	=0.0880
Site Class	=D
Seismic Design Category	=B
-------Base Shear------	
Expanded Formula	= 0.667*Ie*Fa*Ss*W/R
Longitudinal Base Shear	(k) =10.90
Transverse Base Shear	(k) =11.04
--Seismic Response Coefficients--	
Frame	=0.051
FSW	=0.051
BSW	=0.051
--Response Modification Factors--	
Frame	=3
FSW	=3
BSW	=3

DEFLECTION LIMITS

ENDWALL COLUMN L/ 120
ENDWALL RAFTER (Live) L/ 180
ENDWALL RAFTER (Wind) L/ 180
WALL GIRTS L/ 240
PURLIN (LIVE) L/ 180
PURLIN (WIND) L/ 180
WALL PANEL L/ 60
ROOF PANEL (Live) L/ 60
ROOF PANEL (Wind) L/ 60
Main Frame (Horiz) H/ 100
Main Frame (Vert) L/ 180
WIND BRACING H/ 100
Main Frame (Crane) H/ 100
Main Frame (Seismic) H/ 50
SEISMIC BRACING H/ 50
PARTITION COLUMN L/ 120
PARTITION GIRT L/ 120
PARTITION PANEL L/ 120

BUILDING B

ENDWALL COLUMN: BASIC COLUMN REACTIONS (k)

Frm Line	Col Line	Dead Vert	Collat Vert	Live Vert	Snow Vert	Wind_Left1 Horz	Wind_Left1 Vert	Wind_Right1 Horz	Wind_Right1 Vert	Wind_Left2 Horz	Wind_Left2 Vert	Wind_Right2 Horz	Wind_Right2 Vert	Wind Press Horz
5	I	0.9	0.4	2.3	2.6	0.0	-3.9	0.0	-2.3	0.0	-2.6	0.0	-1.1	-3.3
5	H	1.6	1.0	6.0	6.8	-3.7	-13.9	0.0	-2.2	-3.7	-10.8	0.0	0.9	-6.2
5	F	1.5	0.9	5.3	6.0	0.0	-5.3	3.7	-9.1	0.0	-2.6	3.7	-6.4	-6.5
5	D	1.5	0.9	5.3	6.0	0.0	-5.5	0.0	-8.9	0.0	-2.8	0.0	-6.1	-6.5
5	B	1.6	1.0	6.0	6.8	0.0	-5.8	0.0	-10.4	0.0	-2.7	0.0	-7.2	-6.2
5	A	0.9	0.4	2.3	2.6	0.0	-2.3	0.0	-3.9	0.0	-1.1	0.0	-2.7	-3.3

Frm Line	Col Line	Wind Suct Horz	Wind_Long1 Horz	Wind_Long1 Vert	Wind_Long2 Horz	Wind_Long2 Vert	Seis_Left Horz	Seis_Left Vert	Seis_Right Horz	Seis_Right Vert	Seis Long Horz	-MIN_SNOW-- Horz	-MIN_SNOW-- Vert
5	I	3.7	0.0	-3.9	0.0	-2.3	0.0	0.0	0.0	0.0	0.6	0.0	2.4
5	H	6.9	0.0	-10.2	-0.2	-6.0	-1.9	-1.8	0.0	1.8	1.2	0.0	6.5
5	F	7.2	0.2	-9.0	0.0	-5.3	0.0	1.8	1.9	-1.8	1.2	0.0	5.8
5	D	7.2	0.0	-5.5	0.0	-8.8	0.0	0.0	0.0	0.0	1.2	0.0	5.8
5	B	6.9	0.0	-5.8	0.0	-10.4	0.0	0.0	0.0	0.0	1.2	0.0	6.5
5	A	3.7	0.0	-2.3	0.0	-3.9	0.0	0.0	0.0	0.0	0.6	0.0	2.4

ENDWALL COLUMN: ANCHOR BOLTS & BASE PLATES

Frm Line	Col Line	Anc._Bolt Qty	Anc._Bolt Dia	Base_Plate (in) Width	Base_Plate (in) Length	Base_Plate (in) Thick	Grout (in)
5	I	4	0.750	6.000	10.19	0.500	0.0
5	H	4	0.750	6.000	10.19	0.500	0.0
5	F	4	0.750	6.000	10.19	0.500	0.0
5	D	4	0.750	6.000	10.19	0.500	0.0
5	B	4	0.750	6.000	10.19	0.500	0.0
5	A	4	0.750	6.000	10.19	0.500	0.0

BUILDING BRACING REACTIONS

Loc	Wall Line	Col Line	Reactions in plane of wall ± Reactions(k) Wind Horz	Wind Vert	Seismic Horz	Seismic Vert	Panel_Shear (lb/ft) Wind	Panel_Shear (lb/ft) Seis	Note
L_EW	2								(h)
F_SW	I	3,4	14.5	*	5.4	*			
R_EW	5	H,F	Bracing, see EW reactions						
B_SW	A	4,3	14.5	*	5.4	*			

(h)Rigid frame at endwall

*See RF reactions table for vertical and horizontal reactions in plane of the rigid frame.

Reactions for seismic represent shear force, Eh

FRAME LINES: 2

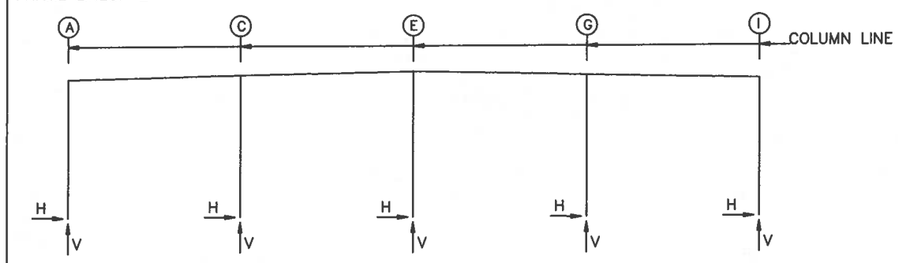

RIGID FRAME: BASIC COLUMN REACTIONS (k)

Frame Line	Column Line	Dead Horz	Dead Vert	Collateral Horz	Collateral Vert	Live Horz	Live Vert	Snow Horz	Snow Vert	Snow_Drift Horz	Snow_Drift Vert	Wind_Left1 Horz	Wind_Left1 Vert
2	A	0.1	1.1	0.1	0.5	0.3	2.1	0.4	3.7	0.0	0.0	-4.6	-8.0
2	I	-0.1	1.1	-0.1	0.5	-0.3	2.1	-0.4	3.7	0.0	0.0	-4.2	-0.9
2	C	0.0	3.1	0.0	1.8	0.0	9.1	0.0	12.8	0.0	3.9	0.0	-13.3
2	E	0.0	3.1	0.0	1.8	0.0	9.0	0.0	12.6	0.0	4.0	0.0	-11.9
2	G	0.0	3.1	0.0	1.8	0.0	9.1	0.0	12.8	0.0	3.9	0.0	-12.0

Frame Line	Column Line	Wind_Right1 Horz	Wind_Right1 Vert	Wind_Left2 Horz	Wind_Left2 Vert	Wind_Right2 Horz	Wind_Right2 Vert	Wind_Long1 Horz	Wind_Long1 Vert	Wind_Long2 Horz	Wind_Long2 Vert	Seismic_Left Horz	Seismic_Left Vert
2	A	4.2	-0.9	-5.6	-6.1	3.3	1.1	1.7	-4.2	1.5	-3.1	-1.9	-1.9
2	I	4.6	-8.0	-3.3	1.1	5.6	-6.1	-1.5	-3.1	-1.7	-4.2	-1.9	1.9
2	C	0.0	-12.0	0.0	-5.7	0.0	-5.8	0.0	-15.2	0.0	-4.5	0.0	2.2
2	E	0.0	-11.9	0.0	-5.4	0.0	-5.4	0.0	-13.5	0.0	-6.7	0.0	0.0
2	G	0.0	-13.3	0.0	-5.8	0.0	-5.7	0.0	-11.3	0.0	-8.5	0.0	-2.3

Frame Line	Column Line	Seismic_Right Horz	Seismic_Right Vert	-MIN_SNOW-- Horz	-MIN_SNOW-- Vert
2	A	1.9	1.9	0.4	3.5
2	I	1.9	-1.9	-0.4	3.5
2	C	0.0	-2.2	0.0	7.4
2	E	0.0	0.0	0.0	7.2
2	G	0.0	2.3	0.0	7.4

RIGID FRAME: ANCHOR BOLTS & BASE PLATES

Frm Line	Col Line	Anc._Bolt Qty	Anc._Bolt Dia	Base_Plate (in) Width	Base_Plate (in) Length	Base_Plate (in) Thick	Grout (in)
2	A	4	0.750	8.000	11.50	0.500	0.0
2	I	4	0.750	8.000	11.50	0.500	0.0
2	C	4	0.750	8.000	14.00	0.500	0.0
2	E	4	0.750	8.000	14.00	0.500	0.0
2	G	4	0.750	8.000	14.00	0.500	0.0

RIGID FRAME: ANCHOR BOLTS & BASE PLATES

Frm Line	Col Line	Anc._Bolt Qty	Anc._Bolt Dia	Base_Plate (in) Width	Base_Plate (in) Length	Base_Plate (in) Thick	Grout (in)
3*	A	4	0.750	8.000	12.00	0.500	0.0
3*	I	4	0.750	8.000	12.00	0.500	0.0
3*	E	4	0.750	10.00	10.00	0.750	0.0

3* Frame lines: 3 4

FRAME LINES: 3 4

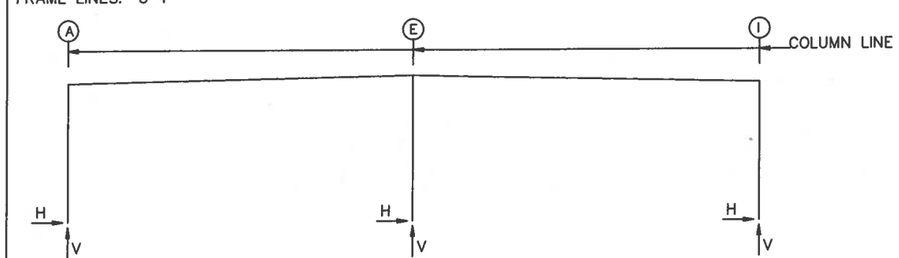

RIGID FRAME: BASIC COLUMN REACTIONS (k)

Frame Line	Column Line	Dead Horz	Dead Vert	Collateral Horz	Collateral Vert	Live Horz	Live Vert	Snow Horz	Snow Vert	Wind_Left1 Horz	Wind_Left1 Vert	Wind_Right1 Horz	Wind_Right1 Vert
3*	A	0.6	2.9	0.6	1.9	2.3	7.7	4.0	13.5	-8.6	-17.7	2.3	-8.6
3*	I	-0.6	2.9	-0.6	1.9	-2.3	7.7	-4.0	13.5	-2.3	-8.6	8.6	-17.7
3*	E	0.0	5.4	0.0	4.4	0.0	17.7	0.0	31.0	0.0	-30.0	0.0	-30.0

Frame Line	Column Line	Wind_Left2 Horz	Wind_Left2 Vert	Wind_Right2 Horz	Wind_Right2 Vert	Wind_Long1 Horz	Wind_Long1 Vert	Wind_Long2 Horz	Wind_Long2 Vert	Seismic_Left Horz	Seismic_Left Vert	Seismic_Right Horz	Seismic_Right Vert
3*	A	-9.0	-11.2	2.0	-2.2	0.3	-29.1	0.1	-23.1	-1.8	-0.7	1.8	0.7
3*	I	-2.0	-2.2	9.0	-11.2	-0.1	-23.1	-0.3	-29.1	-1.8	0.7	1.8	-0.7
3*	E	0.0	-16.2	0.0	-16.2	0.0	-27.4	0.0	-27.4	0.0	0.0	0.0	0.0

Frame Line	Column Line	Seismic_Long Horz	Seismic_Long Vert	-MIN_SNOW-- Horz	-MIN_SNOW-- Vert
3*	A	0.0	-5.1	3.8	12.8
3*	I	0.0	-5.1	-3.8	12.8
3*	E	0.0	0.0	0.0	29.6

3* Frame lines: 3 4

ICS

Iron City Structures, LLC
6731 Surlyn Court
Loveland, OH 45140

Engineer: DAZ Approved: DAZ	Date: 11/09/23
Drafter: DAZ	Date: 11/09/23
Detailer:	Date:
Checker:	Date:

☒ FOR PERMIT: THESE DRAWINGS, BEING FOR PERMIT, ARE BY DEFINITION NOT FINAL. ONLY DRAWINGS ISSUED "FOR CONSTRUCTION" CAN BE CONSIDERED AS COMPLETE.

☐ FOR CONSTRUCTION: FINAL DRAWINGS.

REVISION HISTORY

REV.	DESCRIPTION	DATE

PROJECT:
TJB Manufacturing
33600 Liberty Parkway
North Ridgeville, OH 44039

CUSTOMER:
Makena Construction
104 Flat Rock Road
Bellevue, OH 44811

Project# C2203

PAGE: 4

Anchor Bolt Dia= 3/4"

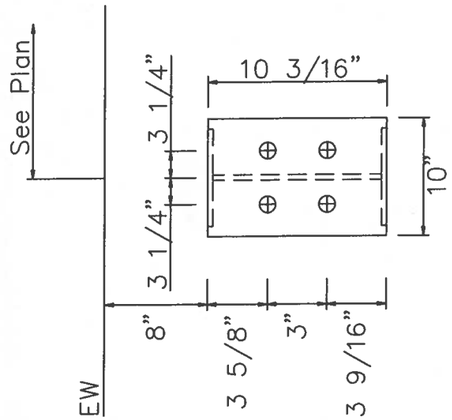

DETAIL A

Anchor Bolt Dia= 3/4"

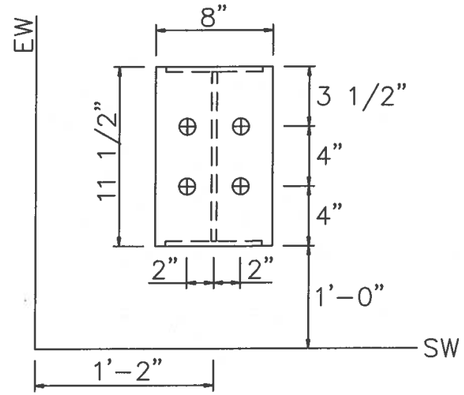

DETAIL B

Anchor Bolt Dia= 3/4"

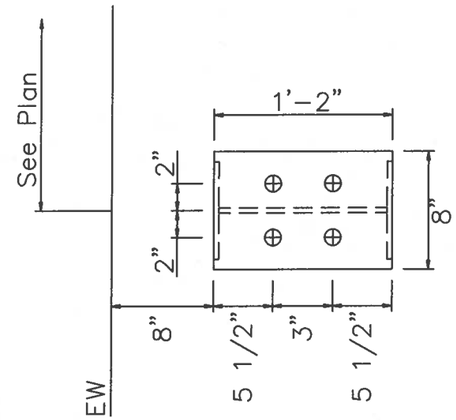

DETAIL C

Anchor Bolt Dia= 3/4"

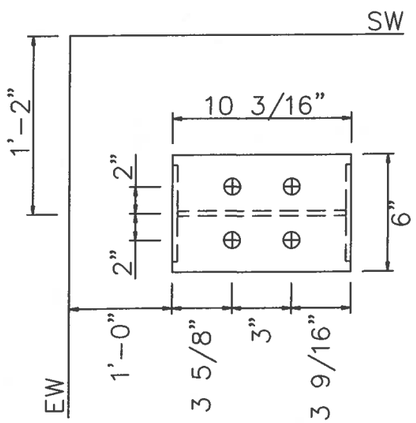

DETAIL D

Anchor Bolt Dia= 3/4"

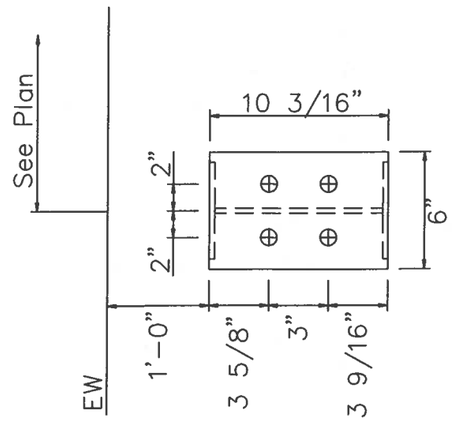

DETAIL E

Anchor Bolt Dia= 3/4"

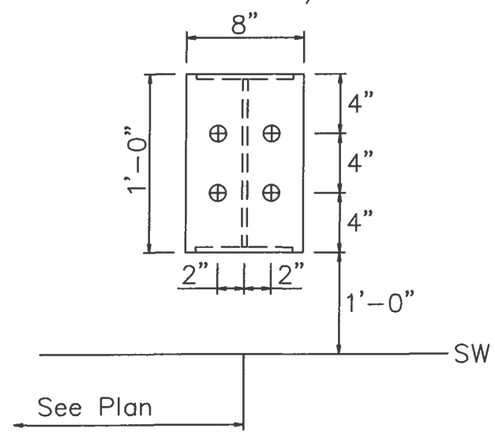

DETAIL F

Anchor Bolt Dia= 3/4"

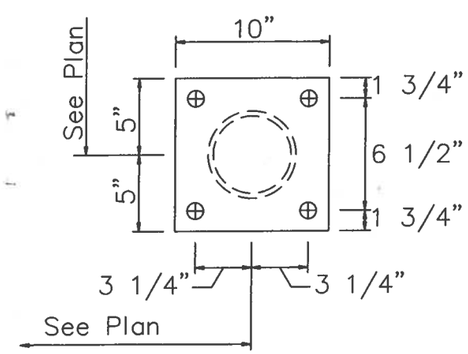

DETAIL G

ICS

Iron City Structures, LLC
6731 Surlyn Court
Loveland, OH 45140

Engineer: DAZ Approved: DAZ	Date: 11/09/23
Drafter: DAZ	Date: 11/09/23
Detailer:	Date:
Checker:	Date:

☒ FOR PERMIT: THESE DRAWINGS, BEING FOR PERMIT, ARE BY DEFINITION NOT FINAL. ONLY DRAWINGS ISSUED "FOR CONSTRUCTION" CAN BE CONSIDERED AS COMPLETE.

☐ FOR CONSTRUCTION: FINAL DRAWINGS.

REVISION HISTORY

REV.	DESCRIPTION	DATE

PROJECT:
TJB Manufacturing
33600 Liberty Parkway
North Ridgeville, OH 44039

CUSTOMER:
Makena Construction
104 Flat Rock Road
Bellevue, OH 44811

Project# C2203

PAGE: 5

SPLICE BOLT TABLE						
Mark	Qty Top	Bot	Int	Type	Dia	Length
SP-1	4	4	0	A325	0.750	2.00

CAP PLATE BOLTS				
Mark	Qty	Type	Dia	Length
EC-1	4	A325	0.750	1.75
EC-2	4	A325	0.750	1.75
EC-3	4	A325	0.750	1.75

▽FLANGE BRACES: Both Sides(U.N.)
FBxxA(1)
A - L15X1/8

MEMBER TABLE					
Mark	Web Depth Start/End	Web Plate Thick	Web Plate Length	Outside Flange W x Thk x Length	Inside Flange W x Thk x Length
RF1-1	11.0/11.0	0.149	244.7	6 x 1/4" x 244.5 6 x 1/4" x 23.2	6 x 1/4" x 230.4
RF1-2	11.0/11.0 11.0/11.0	0.149 0.149	270.0 185.6	6 x 1/4" x 455.4	6 x 1/4" x 455.6
RF1-3	11.0/11.0	0.149	203.0	6 x 1/4" x 203.0	6 x 1/4" x 202.7
RF1-4	11.0/11.8	0.149	71.0	6 x 1/4" x 35.5 6 x 1/4" x 35.5	6 x 1/4" x 71.0
RF1-5	11.0/11.0	0.149	203.0	6 x 1/4" x 203.0	6 x 1/4" x 202.7
RF1-6	11.0/11.0 11.0/11.0	0.149 0.149	185.6 270.0	6 x 1/4" x 455.4	6 x 1/4" x 455.6
EC-1	W10X22				
EC-2	W10X22				
EC-3	W10X22				

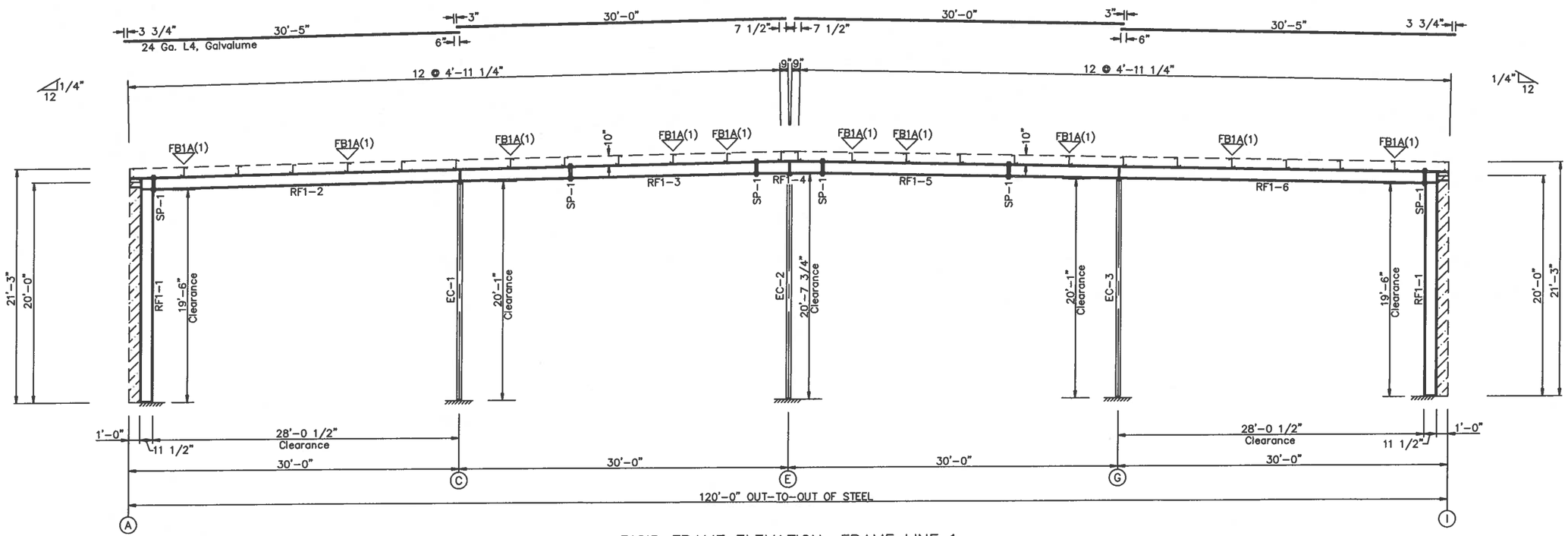

RIGID FRAME ELEVATION: FRAME LINE 1

12" CMU WALL (BY OTHERS)

GENERAL NOTES:

1. See Detail Sheets for Connection Information.
2. See Shipping List for Flange Brace Lengths.

ICS
Iron City Structures, LLC
6731 Surlyn Court
Loveland, OH 45140

Engineer: DAZ Approved: DAZ	Date: 11/09/23
Drafter: DAZ	Date: 11/09/23
Detailer:	Date:
Checker:	Date:

☒ FOR PERMIT: THESE DRAWINGS, BEING FOR PERMIT, ARE BY DEFINITION NOT FINAL. ONLY DRAWINGS ISSUED "FOR CONSTRUCTION" CAN BE CONSIDERED AS COMPLETE.

☐ FOR CONSTRUCTION: FINAL DRAWINGS.

REVISION HISTORY

REV.	DESCRIPTION	DATE

PROJECT:
TJB Manufacturing
33600 Liberty Parkway
North Ridgeville, OH 44039

CUSTOMER:
Makena Construction
104 Flat Rock Road
Bellevue, OH 44811

Project# C2203

PAGE: 6

SPLICE BOLT TABLE						
Mark	Qty Top	Bot	Int	Type	Dia	Length
SP-1	4	4	0	A325	1.000	2.75
SP-2	4	4	0	A325	0.750	2.00

CAP PLATE BOLTS				
Mark	Qty	Type	Dia	Length
EC-100	4	A325	0.750	1.75
EC-101	4	A325	0.750	1.75
EC-102	4	A325	0.750	1.75

▽FLANGE BRACES: Both Sides(U.N.)
FBxxB(1)
B - L20X1/4
A - L15X1/8

MEMBER TABLE					
Mark	Web Depth Start/End	Web Plate Thick	Web Plate Length	Outside Flange W x Thk x Length	Inside Flange W x Thk x Length
RF1-100	11.0/14.3	0.149	217.8	6 x 1/4" x 120.0	6 x 1/4" x 120.0
	14.3/15.0	0.149	60.0	6 x 5/16" x 157.5	6 x 5/16" x 139.7
				6 x 1/4" x 26.9	
RF1-101	14.0/14.0	0.149	270.0	6 x 1/4" x 451.3	6 x 1/4" x 451.3
	14.0/14.0	0.149	181.3		
RF1-102	14.0/14.0	0.149	203.0	6 x 1/4" x 203.0	6 x 1/4" x 202.7
RF1-103	14.0/14.8	0.149	71.0	6 x 1/4" x 35.5	6 x 1/4" x 71.0
				6 x 1/4" x 35.5	
RF1-104	14.0/14.0	0.149	203.0	6 x 1/4" x 203.0	6 x 1/4" x 202.7
RF1-105	14.0/14.0	0.149	181.3	6 x 1/4" x 451.3	6 x 1/4" x 451.3
	14.0/14.0	0.149	270.0		
RF1-106	15.0/14.3	0.149	60.0	6 x 1/4" x 26.9	6 x 5/16" x 139.7
	14.3/11.0	0.149	217.8	6 x 5/16" x 157.5	6 x 1/4" x 120.0
				6 x 1/4" x 120.0	
EC-100	W1406084				
EC-101	W1408064				
EC-102	W1406084				

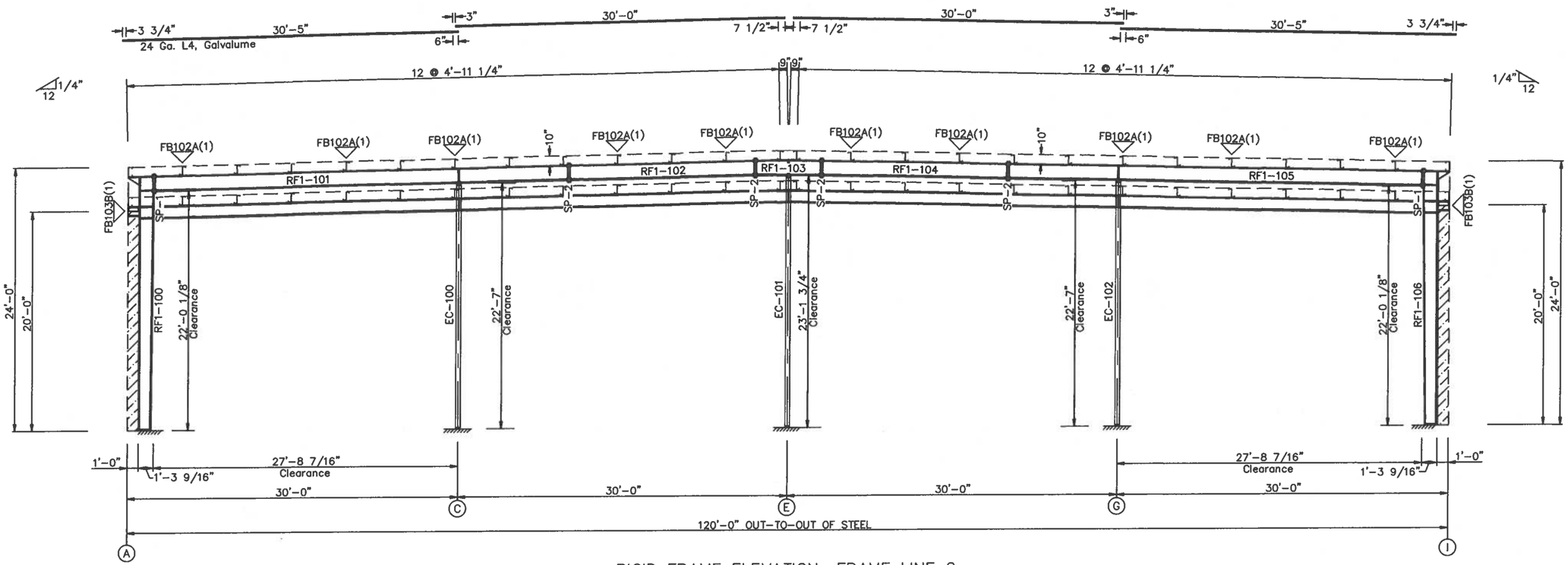

RIGID FRAME ELEVATION: FRAME LINE 2

12" CMU WALL (BY OTHERS)

GENERAL NOTES:

1. See Detail Sheets for Connection Information.
2. See Shipping List for Flange Brace Lengths.

Iron City Structures, LLC
6731 Surlyn Court
Loveland, OH 45140

Engineer: DAZ Approved: DAZ	Date: 11/09/23
Drafter: DAZ	Date: 11/09/23
Detailer:	Date:
Checker:	Date:

☒ FOR PERMIT: THESE DRAWINGS, BEING FOR PERMIT, ARE BY DEFINITION NOT FINAL. ONLY DRAWINGS ISSUED "FOR CONSTRUCTION" CAN BE CONSIDERED AS COMPLETE.

☐ FOR CONSTRUCTION: FINAL DRAWINGS.

REVISION HISTORY		
REV.	DESCRIPTION	DATE

PROJECT:
TJB Manufacturing
33600 Liberty Parkway
North Ridgeville, OH 44039

CUSTOMER:
Makena Construction
104 Flat Rock Road
Bellevue, OH 44811

Project# C2203

PAGE: 7

SPLICE BOLT TABLE						
Mark	Qty Top	Bot	Int	Type	Dia	Length
SP-1	4	4	2	A325	0.750	2.25
SP-2	4	4	2	A325	0.750	2.50

CAP PLATE BOLTS				
Mark	Qty	Type	Dia	Length
RF2-104	4	A325	0.750	2.25

▽FLANGE BRACES: Both Sides(U.N.)
FBxxB(1)
B – L20X1/4
A – L15X1/8

MEMBER TABLE					
Mark	Web Depth Start/End	Web Plate Thick	Web Plate Length	Outside Flange W x Thk x Length	Inside Flange W x Thk x Length
RF2-100	11.0/19.7	0.149	217.9	6 x 3/8" x 120.0	6 x 5/8" x 249.7
	19.7/21.0	0.149	60.0	6 x 1/2" x 157.5	
				6 x 1/4" x 32.8	
RF2-101	25.0/25.0	0.188	205.5	6 x 1/4" x 205.5	6 x 1/4" x 325.5
	25.0/25.0	0.149	120.0	6 x 5/16" x 120.0	
RF2-102	25.0/25.0	0.149	120.0	6 x 5/16" x 120.0	6 x 1/4" x 240.0
	25.0/25.0	0.188	202.6	6 x 1/4" x 202.6	6 x 1/2" x 82.1
RF2-103	25.0/25.8	0.219	70.5	6 x 3/8" x 35.3	6 x 1/2" x 70.5
				6 x 3/8" x 35.3	
RF2-104	P6X19				

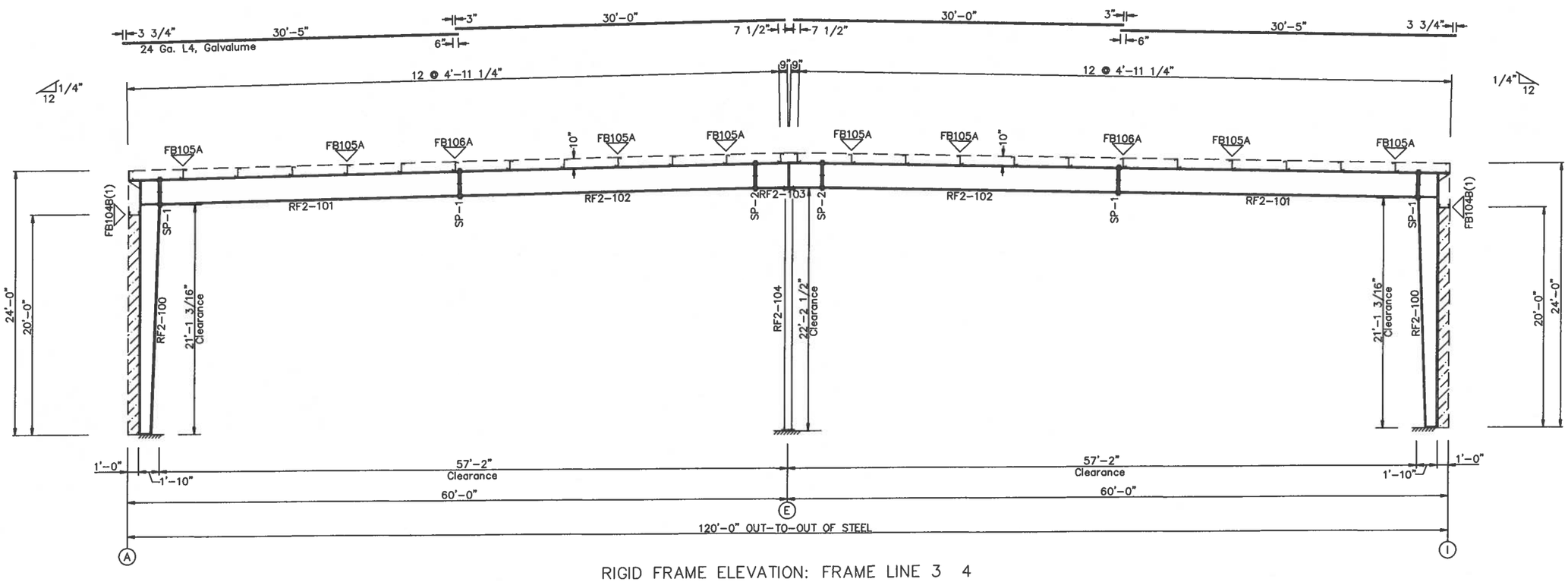

RIGID FRAME ELEVATION: FRAME LINE 3 4

12" CMU WALL (BY OTHERS)

GENERAL NOTES:

1. See Detail Sheets for Connection Information.
2. See Shipping List for Flange Brace Lengths.

Iron City Structures, LLC
6731 Surlyn Court
Loveland, OH 45140

Engineer: DAZ Approved: DAZ	Date: 11/09/23
Drafter: DAZ	Date: 11/09/23
Detailer:	Date:
Checker:	Date:

☒ FOR PERMIT: THESE DRAWINGS, BEING FOR PERMIT, ARE BY DEFINITION NOT FINAL. ONLY DRAWINGS ISSUED "FOR CONSTRUCTION" CAN BE CONSIDERED AS COMPLETE.

☐ FOR CONSTRUCTION: FINAL DRAWINGS.

REVISION HISTORY

REV.	DESCRIPTION	DATE

PROJECT:
TJB Manufacturing
33600 Liberty Parkway
North Ridgeville, OH 44039

CUSTOMER:
Makena Construction
104 Flat Rock Road
Bellevue, OH 44811

Project# C2203

PAGE: 8

MEMBER TABLE FRAME LINE A			
QUAN	MARK	PART	LENGTH
1	G-2	12X35C13	14'-11 3/4"

MEMBER TABLE FRAME LINE A			
QUAN	MARK	PART	LENGTH
1	G-102	12X35C10	22'-11 1/2"
1	G-103	12X35C10	22'-11 1/2"
1	G-104	12X35C10	22'-11 1/2"
3	JB-1	12X35C16	2'-10"
2	CB-102	1.00_ROD	20'-0"
2	CB-103	1.00_ROD	12'-4 7/8"

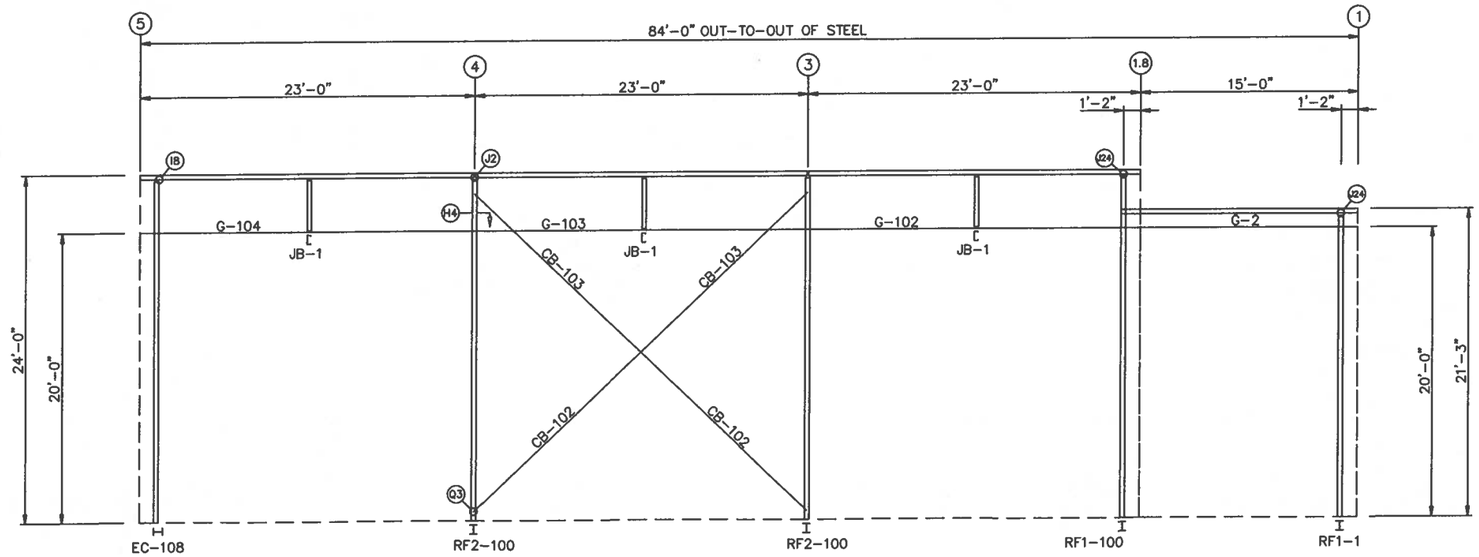

SIDEWALL FRAMING: FRAME LINE A

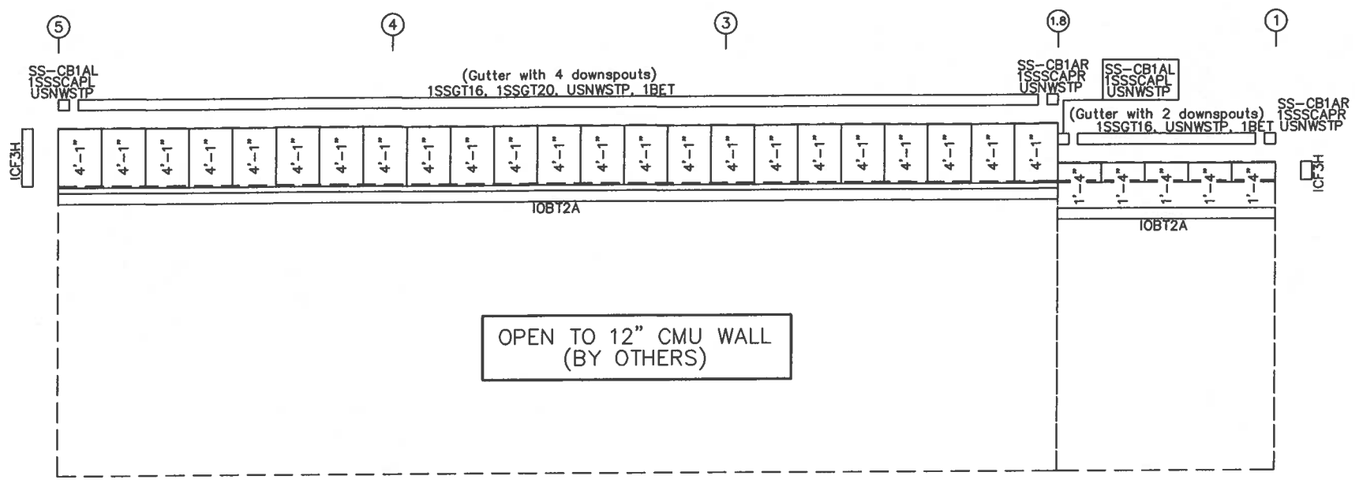

SIDEWALL SHEETING & TRIM: FRAME LINE A

PANELS: 26 Ga. R – TBD

TRIM COLORS

EAVE TRIM = TBD	CORNER TRIM = TBD
BASE TRIM = TBD	GUTTER = TBD
DOOR TRIM = TBD	DOWNSPOUTS = TBD
RAKE TRIM = TBD	

* LINER TRIM = Liner panel color

* SOFFIT TRIM = Soffit panel color

* ONLY APPLICABLE IF LINER TRIM OR SOFFIT PANEL IS INDICATED ON BUILDING ORDER.

GENERAL NOTES:

1. Use TEK5WW screws in place of SD150 panel screws at all 10 gage members.
2. All connections to door or window jambs where the clip is not designated in the clip table / drawing are made with JC# clips (#= Girt Depth).

Iron City Structures, LLC
6731 Surlyn Court
Loveland, OH 45140

Engineer: DAZ Approved: DAZ	Date: 11/09/23
Drafter: DAZ	Date: 11/09/23
Detailer:	Date:
Checker:	Date:

☒ FOR PERMIT: THESE DRAWINGS, BEING FOR PERMIT, ARE BY DEFINITION NOT FINAL. ONLY DRAWINGS ISSUED "FOR CONSTRUCTION" CAN BE CONSIDERED AS COMPLETE.

☐ FOR CONSTRUCTION: FINAL DRAWINGS.

REVISION HISTORY

REV.	DESCRIPTION	DATE

PROJECT:
TJB Manufacturing
33600 Liberty Parkway
North Ridgeville, OH 44039

CUSTOMER:
Makena Construction
104 Flat Rock Road
Bellevue, OH 44811

Project# C2203

PAGE: 9

MEMBER TABLE FRAME LINE I			
QUAN	MARK	PART	LENGTH
1	G-1	12X35C13	14'-11 3/4"

MEMBER TABLE FRAME LINE I			
QUAN	MARK	PART	LENGTH
1	G-102	12X35C10	22'-11 1/2"
1	G-103	12X35C10	22'-11 1/2"
1	G-104	12X35C10	22'-11 1/2"
3	JB-1	12X35C16	2'-10"
2	CB-102	1.00_ROD	20'-0"
2	CB-103	1.00_ROD	12'-4 7/8"

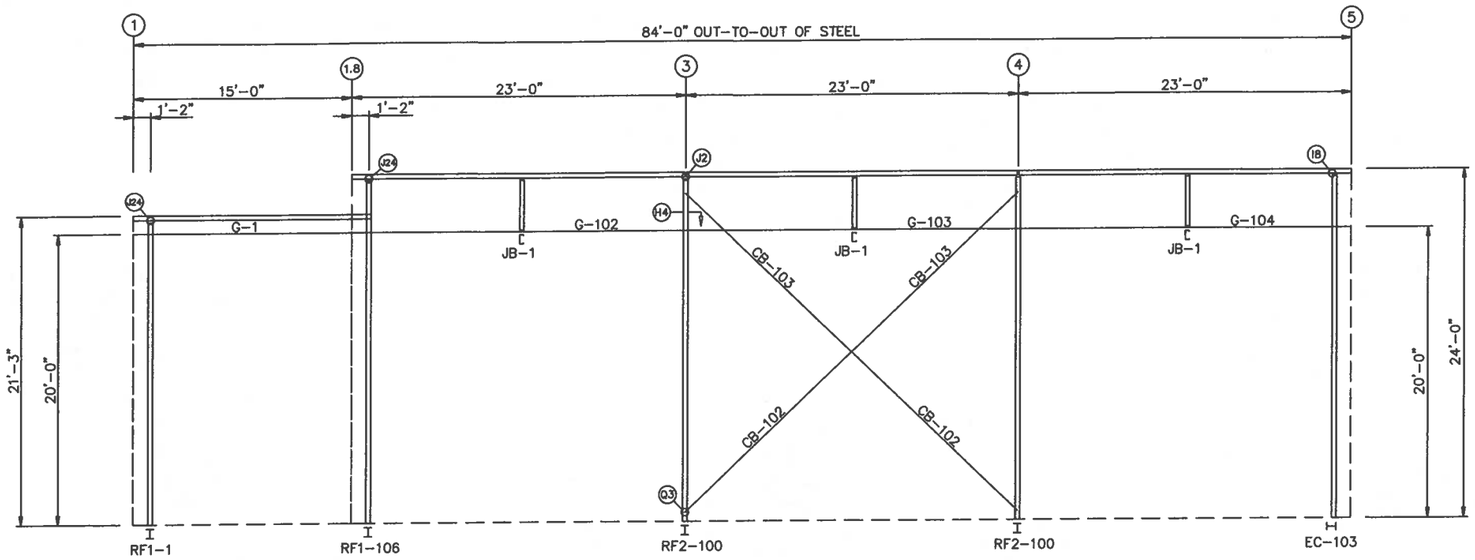

SIDEWALL FRAMING: FRAME LINE I

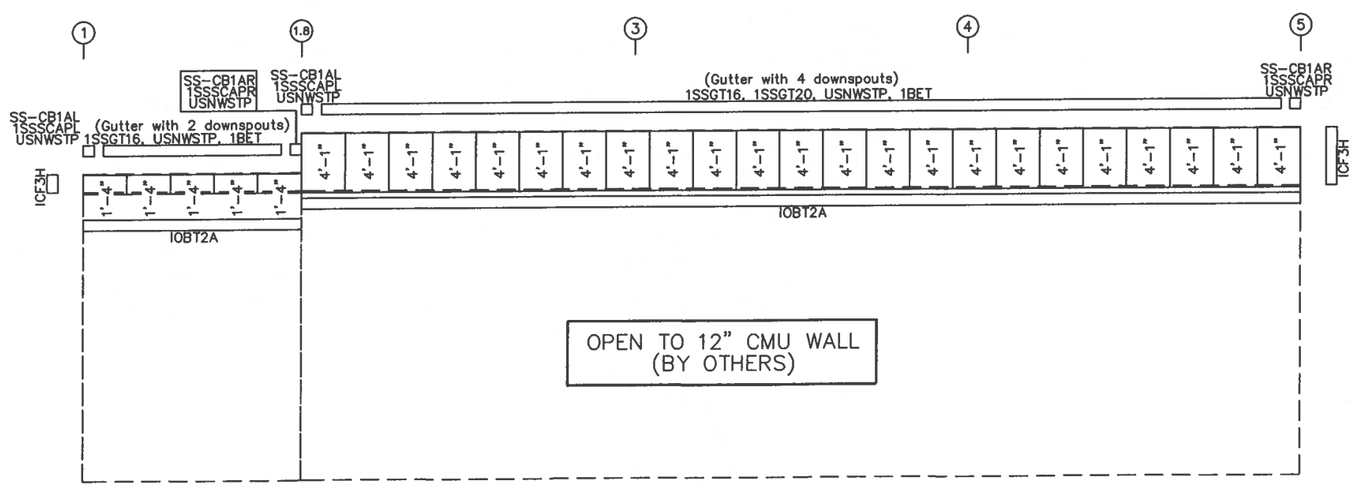

SIDEWALL SHEETING & TRIM: FRAME LINE I

PANELS: 26 Ga. R – TBD

GENERAL NOTES:

1. Use TEK5WW screws in place of SD150 panel screws at all 10 gage members.
2. All connections to door or window jambs where the clip is not designated in the clip table / drawing are made with JC# clips (#= Girt Depth).

TRIM COLORS			
EAVE TRIM	= TBD	CORNER TRIM	= TBD
BASE TRIM	= TBD	GUTTER	= TBD
DOOR TRIM	= TBD	DOWNSPOUTS	= TBD
RAKE TRIM	= TBD		
* LINER TRIM	= Liner panel color		
* SOFFIT TRIM	= Soffit panel color		

* ONLY APPLICABLE IF LINER TRIM OR SOFFIT PANEL IS INDICATED ON BUILDING ORDER.

Iron City Structures, LLC
6731 Surlyn Court
Loveland, OH 45140

Engineer: DAZ Approved: DAZ	Date: 11/09/23
Drafter: DAZ	Date: 11/09/23
Detailer:	Date:
Checker:	Date:

☒ FOR PERMIT: THESE DRAWINGS, BEING FOR PERMIT, ARE BY DEFINITION NOT FINAL. ONLY DRAWINGS ISSUED "FOR CONSTRUCTION" CAN BE CONSIDERED AS COMPLETE.

☐ FOR CONSTRUCTION: FINAL DRAWINGS.

REVISION HISTORY

REV.	DESCRIPTION	DATE

PROJECT:
TJB Manufacturing
33600 Liberty Parkway
North Ridgeville, OH 44039

CUSTOMER:
Makena Construction
104 Flat Rock Road
Bellevue, OH 44811

Project# C2203

PAGE: 10

BOLT TABLE FRAME LINE 1				
LOCATION	QUAN	TYPE	DIA	LENGTH
Columns/Raf	4	A325	3/4"	1 1/2"

MEMBER TABLE FRAME LINE 1			
QUAN	MARK	PART	LENGTH
1	EC-1	W10X22	20'-1 1/16"
1	EC-2	W10X22	20'-7 3/4"
1	EC-3	W10X22	20'-1 1/16"

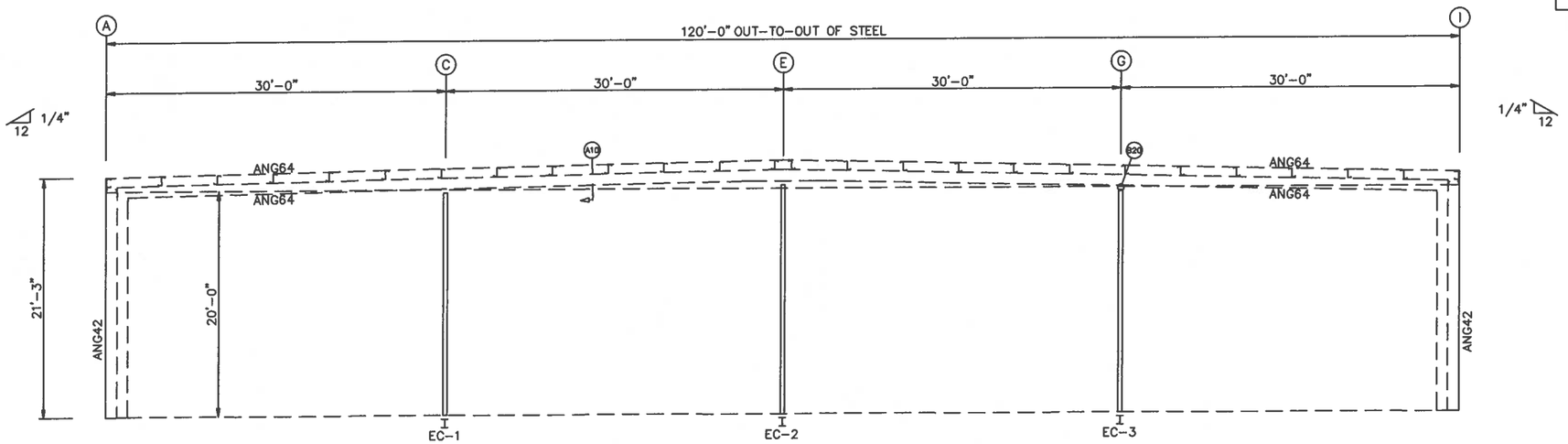

ENDWALL FRAMING: FRAME LINE 1

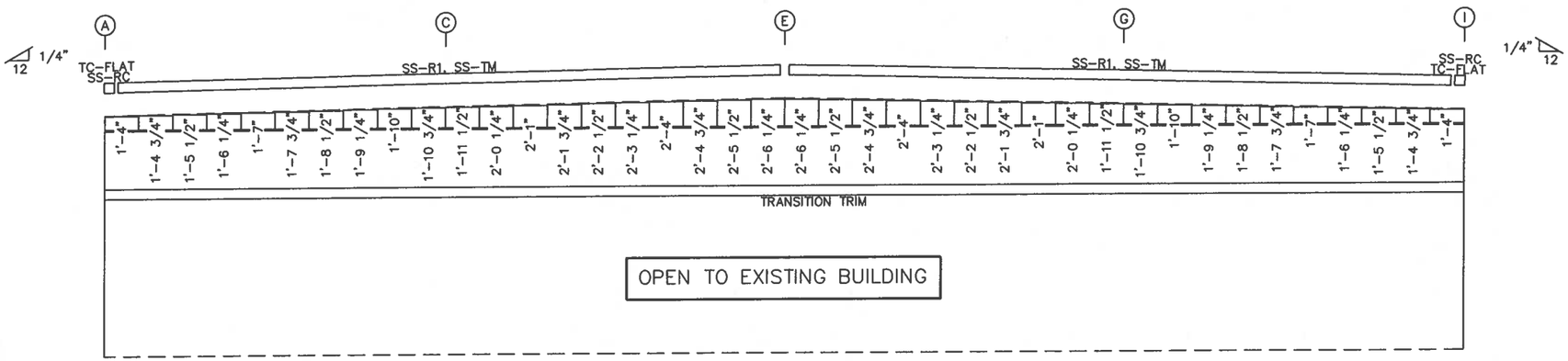

ENDWALL SHEETING & TRIM: FRAME LINE 1

PANELS: 26 Ga. R – TBD

TRIM COLORS			
EAVE TRIM	= TBD	CORNER TRIM	= TBD
BASE TRIM	= TBD	GUTTER	= TBD
DOOR TRIM	= TBD	DOWNSPOUTS	= TBD
RAKE TRIM	= TBD		
* LINER TRIM	= Liner panel color		
* SOFFIT TRIM	= Soffit panel color		

* ONLY APPLICABLE IF LINER TRIM OR SOFFIT PANEL IS INDICATED ON BUILDING ORDER.

GENERAL NOTES:

1. Use TEK5WW screws in place of SD150 panel screws at all 10 gage members.
2. See detail C7A for field coping of coldform endwall column flange braces.
3. All connections to door or window jambs where the clip is not designated in the clip table / drawing are made with JC# clips (#= Girt Depth).

Iron City Structures, LLC
6731 Surlyn Court
Loveland, OH 45140

Engineer: DAZ Approved: DAZ	Date: 11/09/23
Drafter: DAZ	Date: 11/09/23
Detailer:	Date:
Checker:	Date:

☒ FOR PERMIT: THESE DRAWINGS, BEING FOR PERMIT, ARE BY DEFINITION NOT FINAL. ONLY DRAWINGS ISSUED "FOR CONSTRUCTION" CAN BE CONSIDERED AS COMPLETE.

☐ FOR CONSTRUCTION: FINAL DRAWINGS.

REVISION HISTORY

REV.	DESCRIPTION	DATE

PROJECT:
TJB Manufacturing
33600 Liberty Parkway
North Ridgeville, OH 44039

CUSTOMER:
Makena Construction
104 Flat Rock Road
Bellevue, OH 44811

Project# C2203

PAGE: 11

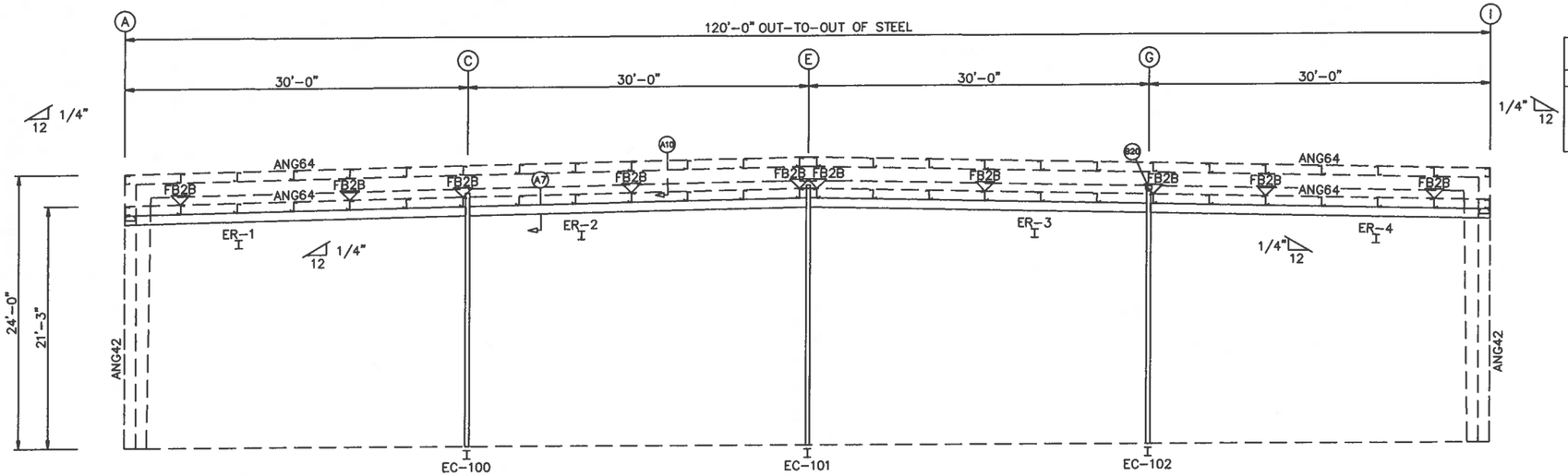

ENDWALL FRAMING: FRAME LINE 1.8

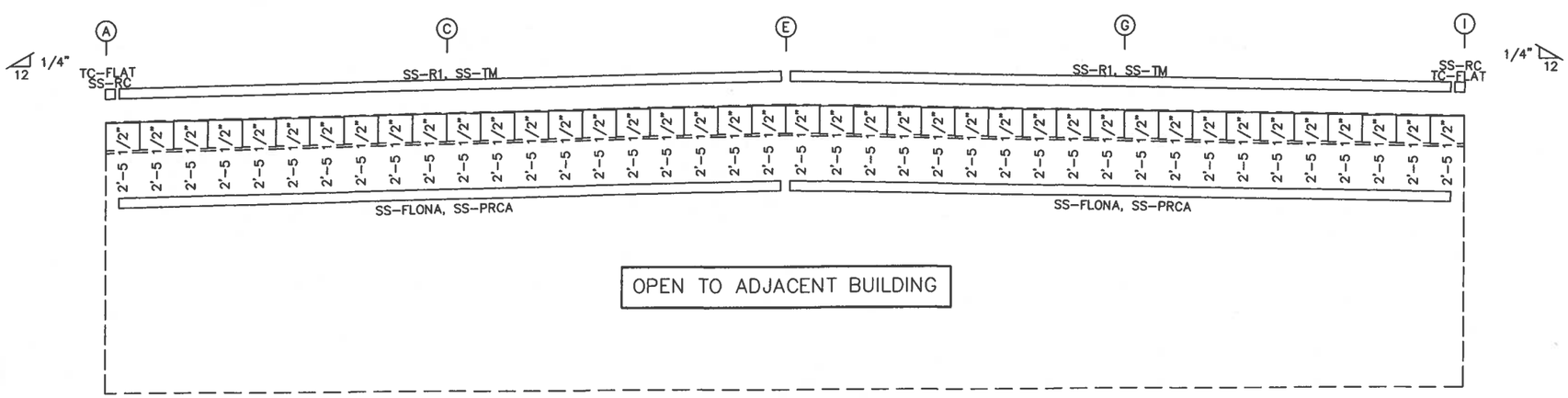

ENDWALL SHEETING & TRIM: FRAME LINE 1.8

PANELS: 26 Ga. R – TBD

BOLT TABLE
FRAME LINE 1.8

LOCATION	QUAN	TYPE	DIA	LENGTH
Columns/Raf	4	A325	3/4"	1 1/2"

MEMBER TABLE
FRAME LINE 1.8

QUAN	MARK	PART	LENGTH
1	EC-100	W1406084	22'-7 1/16"
1	EC-101	W1406084	23'-1 3/4"
1	EC-102	W1406084	22'-7 1/16"

BOLT TABLE
FRAME LINE 1.8

LOCATION	QUAN	TYPE	DIA	LENGTH
Cor_Column/Raf	4	A325	1/2"	1 1/4"
ER-1/ER-2	4	A325	1/2"	1 1/2"
ER-2/ER-3	4	A325	1/2"	1 1/2"
ER-3/ER-4	4	A325	1/2"	1 1/2"

MEMBER TABLE
FRAME LINE 1.8

QUAN	MARK	PART	LENGTH
1	ER-1	W1206043	27'-9 1/16"
1	ER-2	W1206043	30'-0 1/16"
1	ER-3	W1206043	30'-0 1/16"
1	ER-4	W1206043	27'-9 1/16"

FLANGE BRACE TABLE
FRAME LINE 1.8

▽ID	MARK	LENGTH
1	FB2B	1'-7"

TRIM COLORS

EAVE TRIM	= TBD	CORNER TRIM	= TBD
BASE TRIM	= TBD	GUTTER	= TBD
DOOR TRIM	= TBD	DOWNSPOUTS	= TBD
RAKE TRIM	= TBD		

* LINER TRIM = Liner panel color
* SOFFIT TRIM = Soffit panel color
* ONLY APPLICABLE IF LINER TRIM OR SOFFIT PANEL IS INDICATED ON BUILDING ORDER.

GENERAL NOTES:

1. Use TEK5WW screws in place of SD150 panel screws at all 10 gage members.
2. See detail C7A for field coping of coldform endwall column flange braces.
3. All connections to door or window jambs where the clip is not designated in the clip table / drawing are made with JC# clips (#= Girt Depth).

ICS
Iron City Structures, LLC
6731 Surlyn Court
Loveland, OH 45140

Engineer: DAZ	Date: 11/09/23
Approved: DAZ	
Drafter: DAZ	Date: 11/09/23
Detailer:	Date:
Checker:	Date:

☒ FOR PERMIT: THESE DRAWINGS, BEING FOR PERMIT, ARE BY DEFINITION NOT FINAL. ONLY DRAWINGS ISSUED "FOR CONSTRUCTION" CAN BE CONSIDERED AS COMPLETE.

☐ FOR CONSTRUCTION: FINAL DRAWINGS.

REVISION HISTORY

REV.	DESCRIPTION	DATE

PROJECT:
TJB Manufacturing
33600 Liberty Parkway
North Ridgeville, OH 44039

CUSTOMER:
Makena Construction
104 Flat Rock Road
Bellevue, OH 44811

Project# C2203

PAGE: 12

BOLT TABLE FRAME LINE 5				
LOCATION	QUAN	TYPE	DIA	LENGTH
ER-100/ER-101	8	A325	1/2"	1 1/2"
ER-101/ER-102	8	A325	1/2"	1 1/2"
ER-102/ER-103	8	A325	1/2"	1 1/2"
Columns/Raf	2	A325	3/4"	1 3/4"

MEMBER TABLE FRAME LINE 5			
QUAN	MARK	PART	LENGTH
1	EC-103	W10X22	22'-1 9/16"
1	EC-104	W10X22	22'-7 1/4"
1	EC-105	W10X22	23'-1 1/4"
1	EC-106	W10X22	23'-1 1/4"
1	EC-107	W10X22	22'-7 1/4"
1	EC-108	W10X22	22'-1 9/16"
1	ER-100	W12X16	26'-0 1/4"
1	ER-101	W12X16	33'-11 7/8"
1	ER-102	W12X16	33'-11 7/8"
1	ER-103	W12X16	26'-0 1/4"
2	G-100	12X35C10	22'-11 1/2"
3	G-101	12X35C10	23'-11 1/2"
2	JB-100	12X35C16	3'-1"
2	JB-101	12X35C16	3'-7"
1	JB-102	12X35C16	4'-1"
1	CB-100	CABLE375	30'-3 13/16"
1	CB-101	CABLE375	29'-11 13/16"

FLANGE BRACE TABLE FRAME LINE 5		
▽ID	MARK	LENGTH
1	FB101B	1'-7"
2	FB100B	1'-6 1/4"

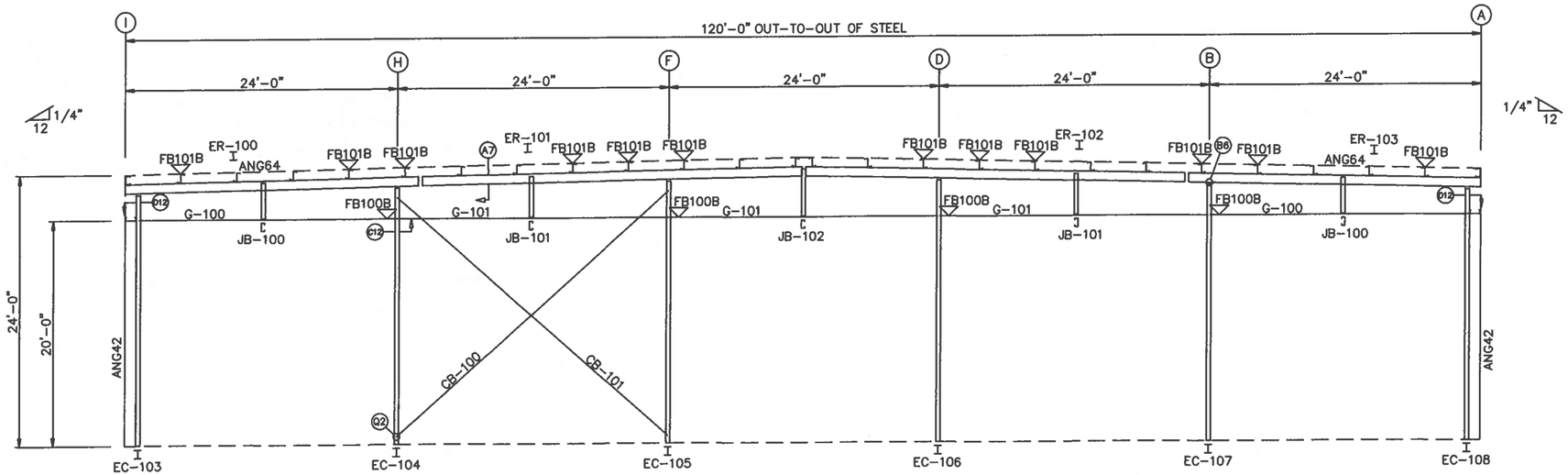

ENDWALL FRAMING: FRAME LINE 5

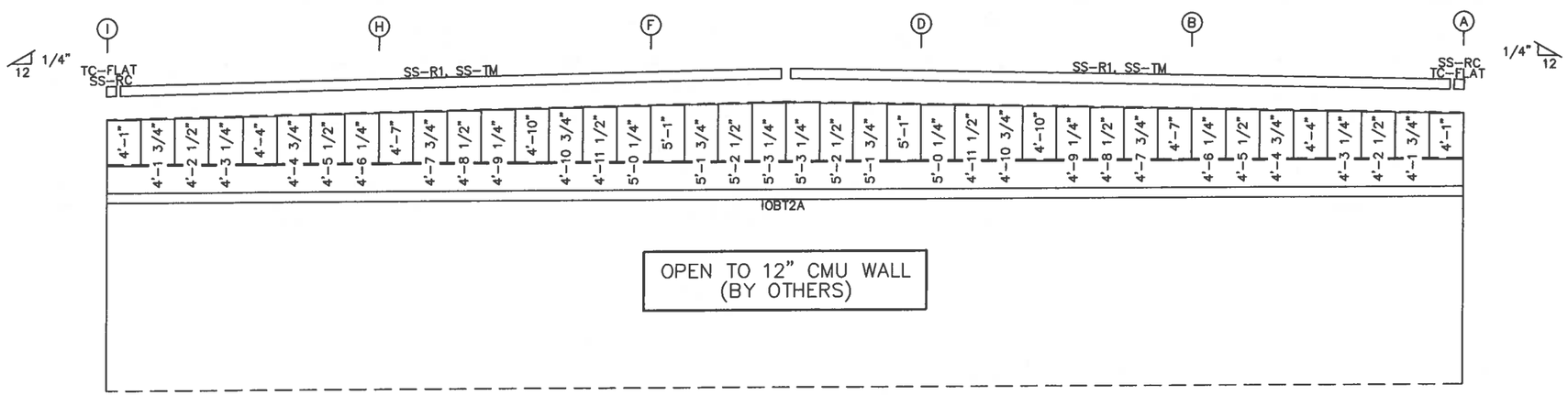

ENDWALL SHEETING & TRIM: FRAME LINE 5

PANELS: 26 Ga. R – TBD

TRIM COLORS	
EAVE TRIM = TBD	CORNER TRIM = TBD
BASE TRIM = TBD	GUTTER = TBD
DOOR TRIM = TBD	DOWNSPOUTS = TBD
RAKE TRIM = TBD	
* LINER TRIM = Liner panel color	
* SOFFIT TRIM = Soffit panel color	

* ONLY APPLICABLE IF LINER TRIM OR SOFFIT PANEL IS INDICATED ON BUILDING ORDER.

GENERAL NOTES:

1. Use TEK5WW screws in place of SD150 panel screws at all 10 gage members.
2. See detail C7A for field coping of coldform endwall column flange braces.
3. All connections to door or window jambs where the clip is not designated in the clip table / drawing are made with JC# clips (#= Girt Depth).

Iron City Structures, LLC
6731 Surlyn Court
Loveland, OH 45140

Engineer: DAZ Approved: DAZ	Date: 11/09/23
Drafter: DAZ	Date: 11/09/23
Detailer:	Date:
Checker:	Date:

☒ FOR PERMIT: THESE DRAWINGS, BEING FOR PERMIT, ARE BY DEFINITION NOT FINAL. ONLY DRAWINGS ISSUED "FOR CONSTRUCTION" CAN BE CONSIDERED AS COMPLETE.

☐ FOR CONSTRUCTION: FINAL DRAWINGS.

REVISION HISTORY

REV.	DESCRIPTION	DATE

PROJECT:
TJB Manufacturing
33600 Liberty Parkway
North Ridgeville, OH 44039

CUSTOMER:
Makena Construction
104 Flat Rock Road
Bellevue, OH 44811

Project# C2203

PAGE: 13

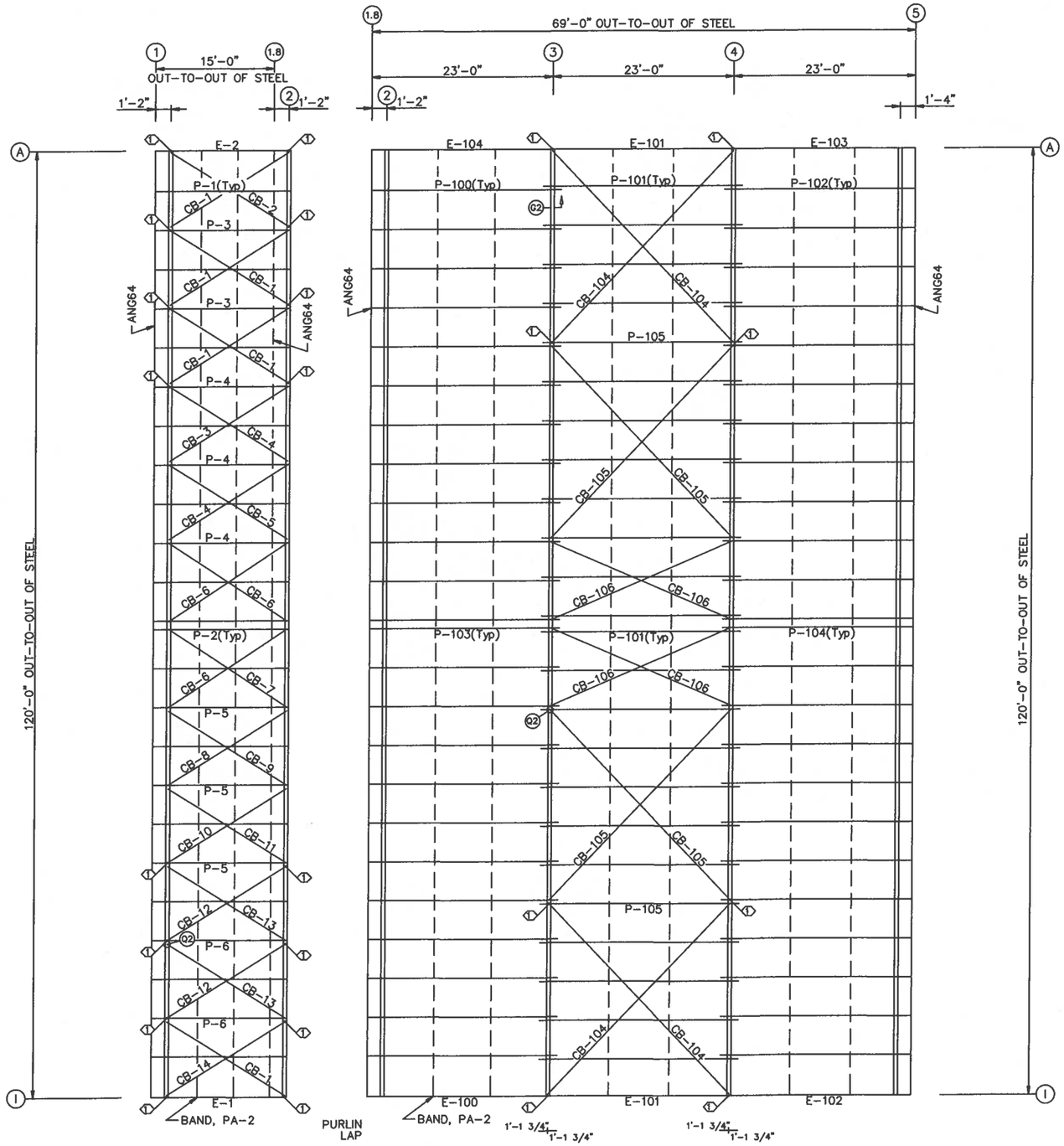

ROOF FRAMING PLAN

MEMBER TABLE
ROOF PLAN

QUAN	MARK	PART	LENGTH
7	P-1	10X25Z14	16'-3 1/2"
7	P-2	10X25Z14	16'-3 1/2"
2	P-3	10X25Z12	16'-3 1/2"
3	P-4	10X25Z13	16'-3 1/2"
3	P-5	10X25Z13	16'-3 1/2"
2	P-6	10X25Z12	16'-3 1/2"
1	E-1	10X35E13	16'-4"
1	E-2	10X35E13	16'-4"
6	CB-1	CABLE500	15'-0 3/16"
1	CB-2	CABLE500	14'-6 7/16"
1	CB-3	CABLE375	15'-2 3/16"
2	CB-4	CABLE375	15'-5 3/16"
1	CB-5	CABLE375	15'-8 1/4"
3	CB-6	CABLE375	15'-9 7/8"
1	CB-7	CABLE375	16'-6 9/16"
1	CB-8	CABLE375	15'-0 9/16"
1	CB-9	CABLE375	16'-1 3/8"
1	CB-10	CABLE375	14'-9 13/16"
1	CB-11	CABLE375	15'-10 1/16"
2	CB-12	CABLE500	14'-4 13/16"
2	CB-13	CABLE500	15'-8 3/8"
1	CB-14	CABLE500	13'-11 3/4"

SPECIAL BOLTS
ROOF PLAN

ID	QUAN	TYPE	DIA	LENGTH	WASH
1	4	A325	1/2"	1 1/4"	0

MEMBER TABLE
ROOF PLAN

QUAN	MARK	PART	LENGTH
12	P-100	10X25Z14	24'-1 1/2"
22	P-101	10X25Z14	25'-3 1/2"
12	P-102	10X25Z14	24'-1 1/2"
12	P-103	10X25Z14	24'-1 1/2"
12	P-104	10X25Z14	24'-1 1/2"
2	P-105	10X25Z13	25'-3 1/2"
1	E-100	10X35E16	22'-11 1/2"
2	E-101	10X35E10	22'-11 1/2"
1	E-102	10X35E16	22'-11 1/2"
1	E-103	10X35E16	22'-11 1/2"
1	E-104	10X35E16	22'-11 1/2"
4	CB-104	CABLE500	29'-10 13/16"
4	CB-105	CABLE375	31'-0 1/4"
4	CB-106	CABLE250	23'-2 5/16"

SPECIAL BOLTS
ROOF PLAN

ID	QUAN	TYPE	DIA	LENGTH	WASH
1	4	A325	1/2"	1 1/4"	0

GENERAL NOTES:

1. Screw Down Roof: Use TEK5WW screws in place of SD150 panel screws at all 10 gage purlins, eave struts, or roof joists.
2. Standing Seam Roof: Use FST#6 in place of FST#1 clip to purlin screws at all 10 gage purlins, eave struts, or at roof joists.

ICS

Iron City Structures, LLC
6731 Surlyn Court
Loveland, OH 45140

Engineer: DAZ Approved: DAZ	Date: 11/09/23
Drafter: DAZ	Date: 11/09/23
Detailer:	Date:
Checker:	Date:

☒ FOR PERMIT: THESE DRAWINGS, BEING FOR PERMIT, ARE BY DEFINITION NOT FINAL. ONLY DRAWINGS ISSUED "FOR CONSTRUCTION" CAN BE CONSIDERED AS COMPLETE.

☐ FOR CONSTRUCTION: FINAL DRAWINGS.

REVISION HISTORY

REV.	DESCRIPTION	DATE

PROJECT:
TJB Manufacturing
33600 Liberty Parkway
North Ridgeville, OH 44039

CUSTOMER:
Makena Construction
104 Flat Rock Road
Bellevue, OH 44811

Project# C2203

PAGE: 14

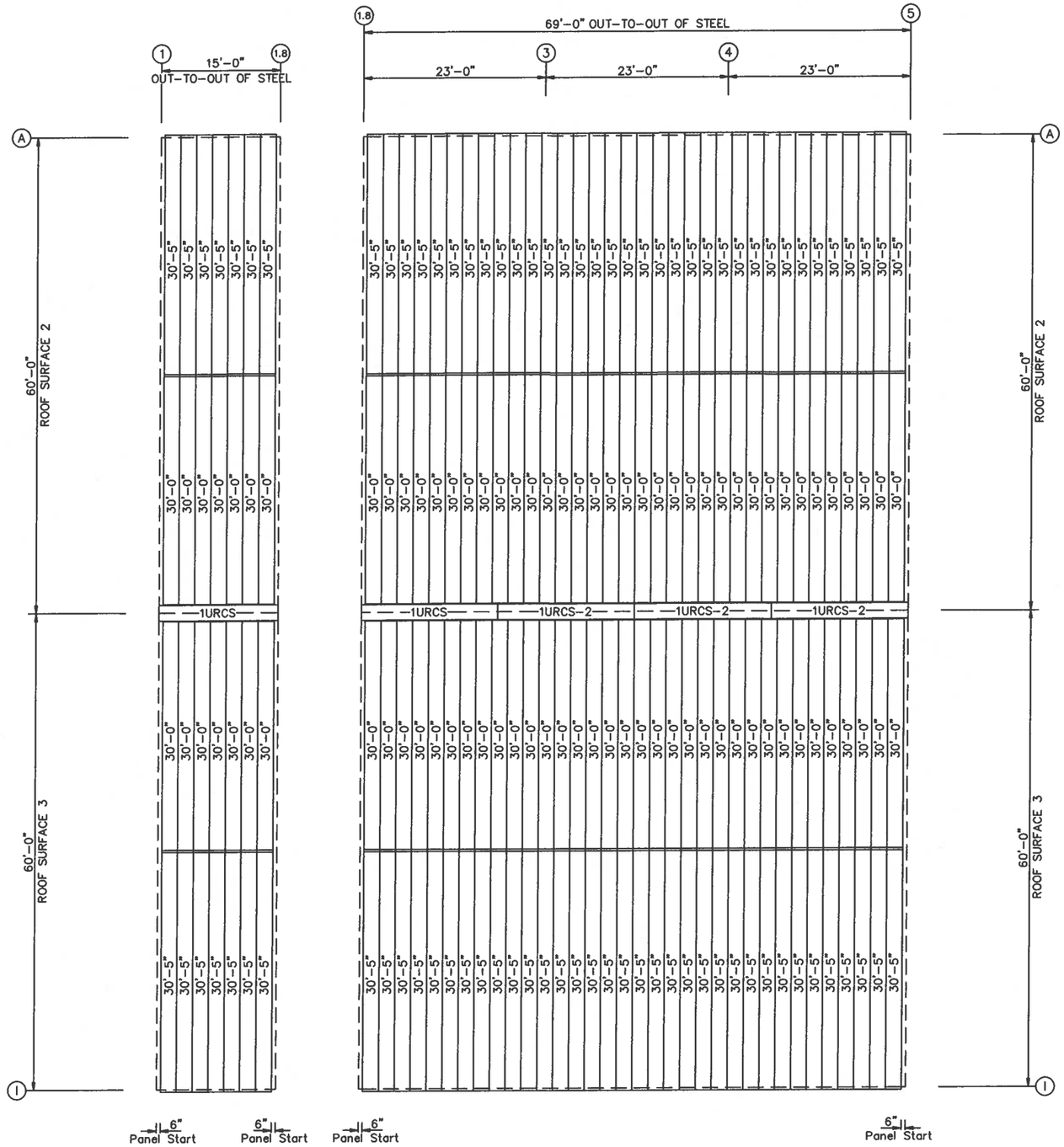

ROOF SHEETING PLAN

PANELS: 24 Ga. L4 – Galvalume

GENERAL NOTES:

Panel "Start" and "End" dimensions must be followed for the proper installation of the gable trim(s) provided.

ICS

Iron City Structures, LLC
6731 Surlyn Court
Loveland, OH 45140

Engineer: DAZ Approved: DAZ	Date: 11/09/23
Drafter: DAZ	Date: 11/09/23
Detailer:	Date:
Checker:	Date:

☒ FOR PERMIT: THESE DRAWINGS, BEING FOR PERMIT, ARE BY DEFINITION NOT FINAL. ONLY DRAWINGS ISSUED "FOR CONSTRUCTION" CAN BE CONSIDERED AS COMPLETE.

☐ FOR CONSTRUCTION: FINAL DRAWINGS.

REVISION HISTORY

REV.	DESCRIPTION	DATE

PROJECT:
TJB Manufacturing
33600 Liberty Parkway
North Ridgeville, OH 44039

CUSTOMER:
Makena Construction
104 Flat Rock Road
Bellevue, OH 44811

Project# C2203

PAGE: 15

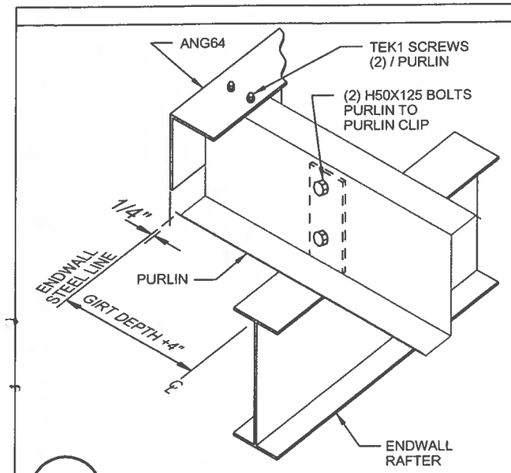

A7 PURLIN TO ENDWALL RAFTER CONNECTION

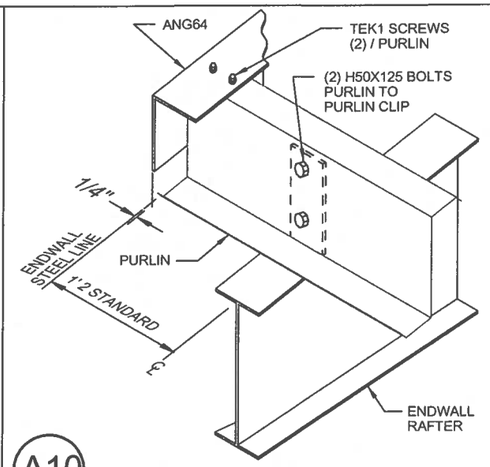

A10 PURLIN TO RIGID FRAME ENDWALL RAFTER CONNECTION

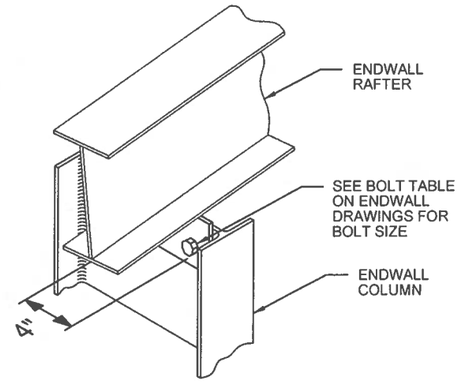

B6 ENDWALL COLUMN TO RAFTER CONNECTION

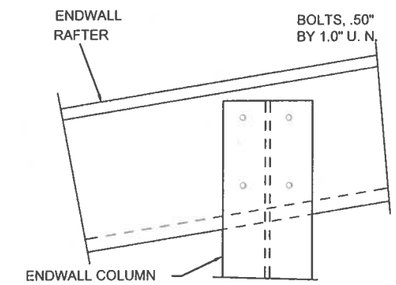

B9 ENDWALL RAFTER TO COLUMN

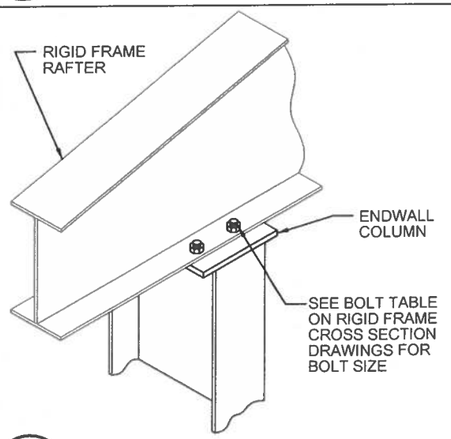

B20 ENDWALL COLUMN TO RIGID FRAME RAFTER CONNECTION (BYPASS GIRTS)

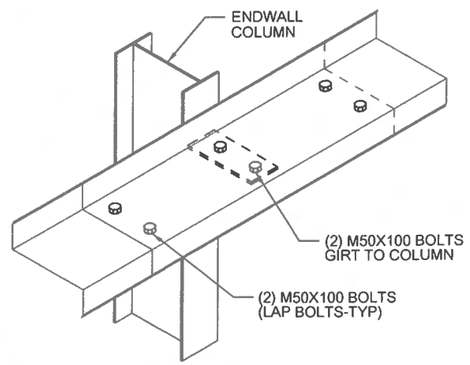

C12 GIRT TO ENDWALL COLUMN

NOTE #1: FIELD NOTCHING OF GIRTS WILL BE REQUIRED WHEN GIRT ELEVATIONS ARE NOT THE SAME FROM WALL TO WALL.

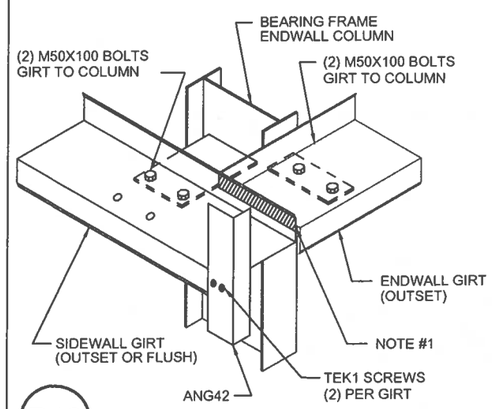

D12 BEARING FRAME CORNER COLUMN TO BYPASS ENDWALL GIRT

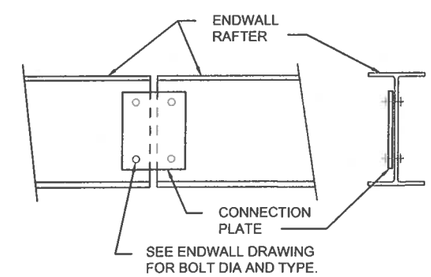

F3 RAFTER SPLICE ALONG SURFACE

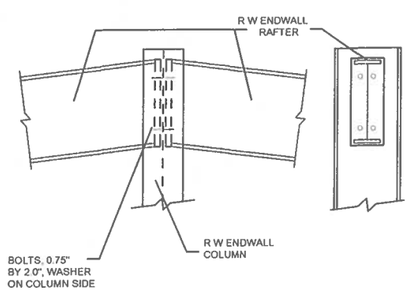

F38 RAFTER SPLICE AT SURFACE CHANGE WITH COLUMN SUPPORT

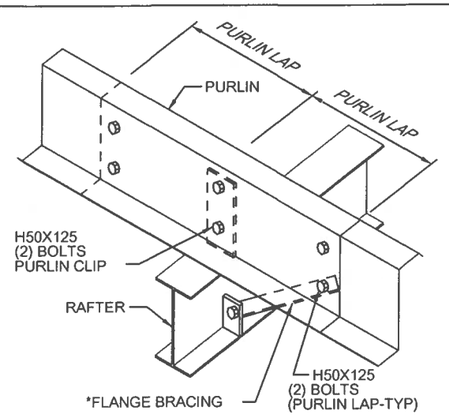

*MAY BE NEAR SIDE, FAR SIDE, OR BOTH

G2 ROOF PURLIN TO INTERIOR FRAME RAFTER

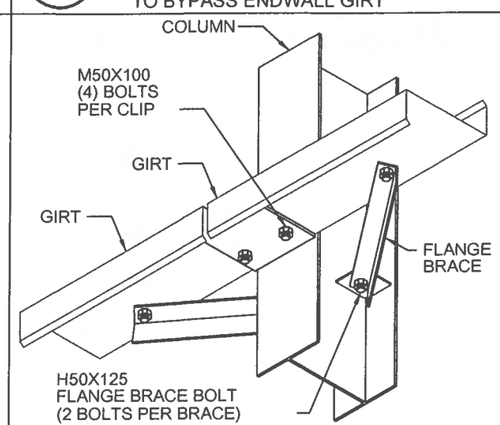

H4 GIRT TO COLUMN - OUTSET GIRTS

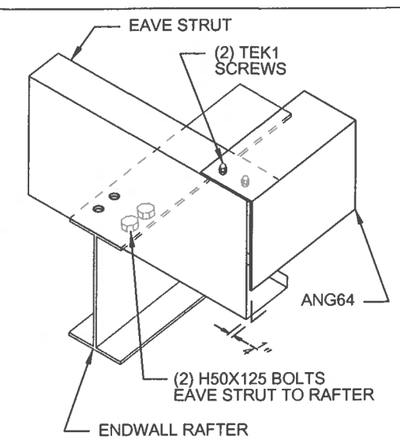

I8 EAVE STRUT TO ENDWALL RAFTER LOW EAVE

ICS
Iron City Structures, LLC
6731 Surlyn Court
Loveland, OH 45140

Engineer: DAZ Approved: DAZ	Date: 11/09/23
Drafter: DAZ	Date: 11/09/23
Detailer:	Date:
Checker:	Date:

☒ FOR PERMIT: THESE DRAWINGS, BEING FOR PERMIT, ARE BY DEFINITION NOT FINAL. ONLY DRAWINGS ISSUED "FOR CONSTRUCTION" CAN BE CONSIDERED AS COMPLETE.

☐ FOR CONSTRUCTION: FINAL DRAWINGS.

REVISION HISTORY

REV.	DESCRIPTION	DATE

PROJECT:
TJB Manufacturing
33600 Liberty Parkway
North Ridgeville, OH 44039

CUSTOMER:
Makena Construction
104 Flat Rock Road
Bellevue, OH 44811

Project# C2203

PAGE: 16

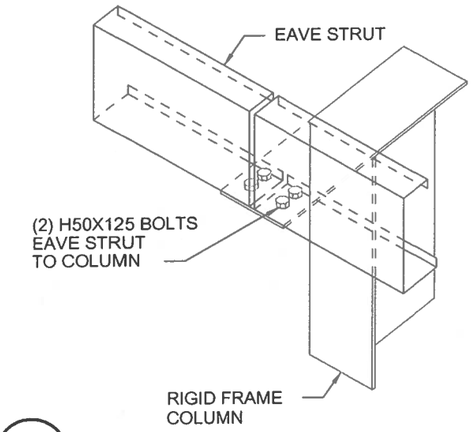

J2 EAVE STRUT TO RIGID FRAME BYPASS GIRT CONDITION

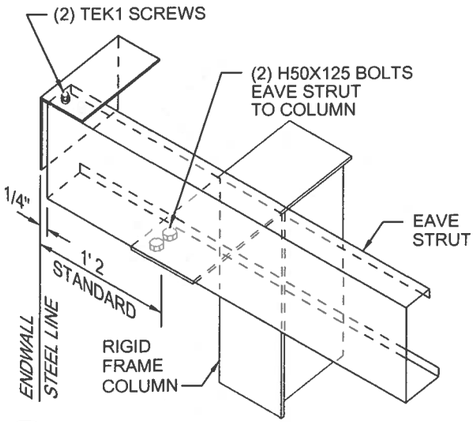

J24 EAVE STRUT TO RIGID FRAME IN ENDWALL - BYPASS GIRTS LOW EAVE

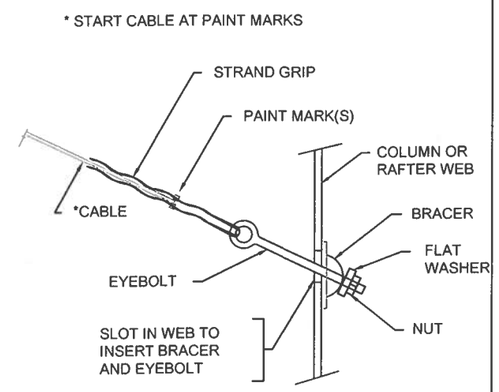

Q2 CABLE BRACE / EYEBOLT

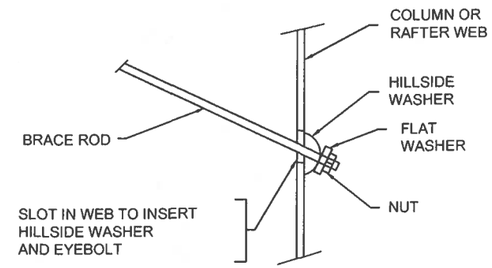

Q3 DIAGONAL BRACE ROD, NUT END

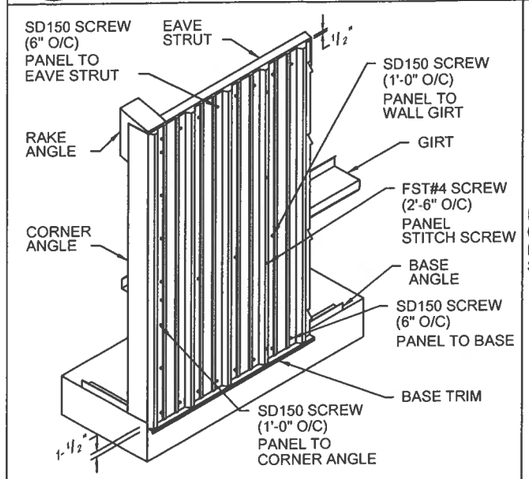

"R" PANEL SIDEWALL

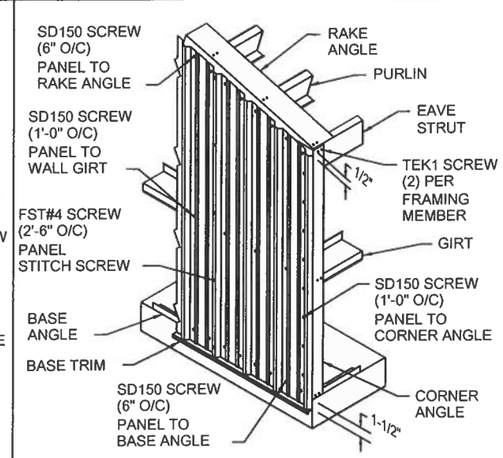

"R" PANEL ENDWALL

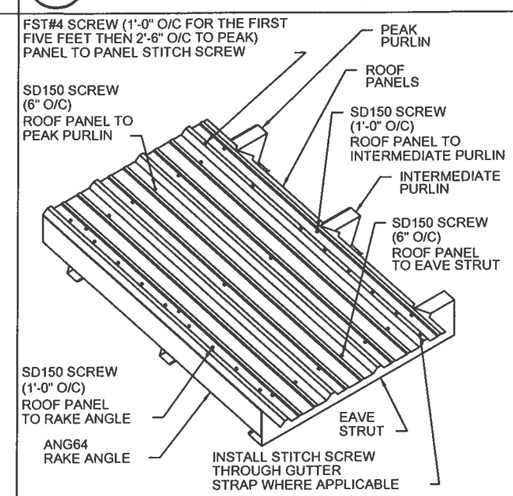

ROOF FASTENER APPLICATION

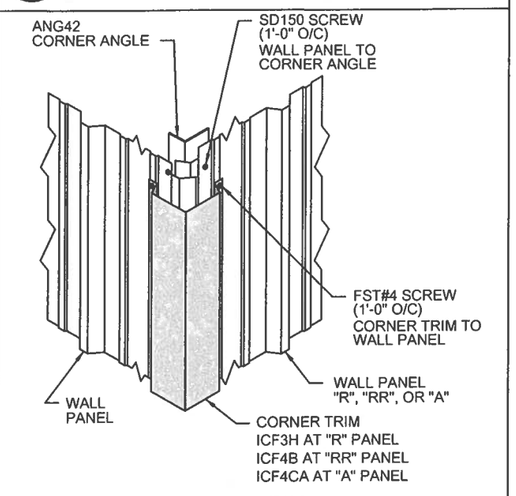

CORNER TRIM

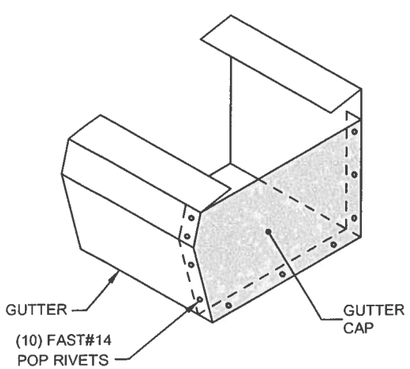

GUTTER CAP INSTALLATION

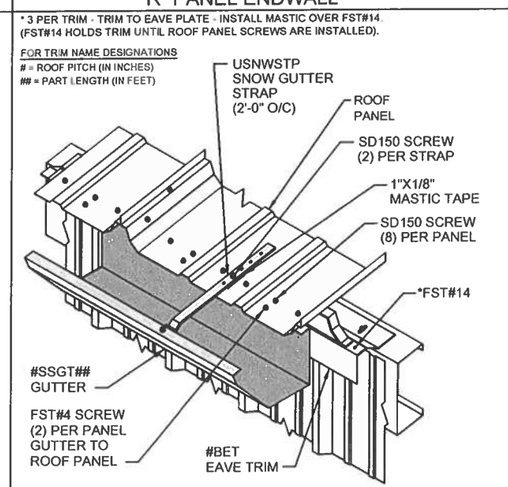

SNOW GUTTER

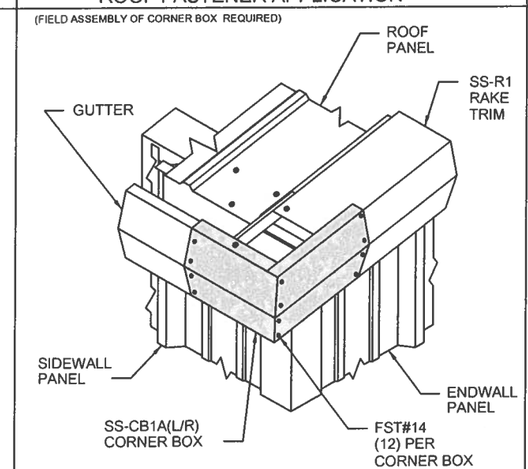

CORNER BOX INSTALLATION

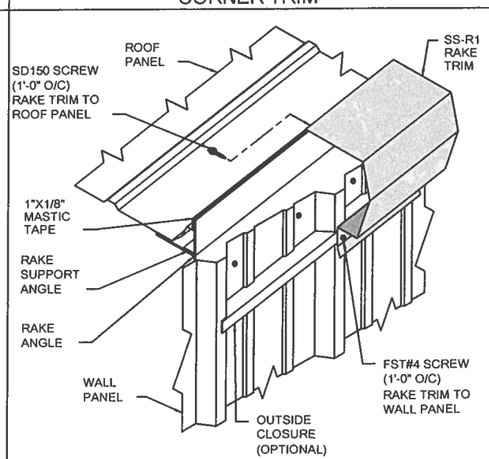

RAKE TRIM
(ROOF SURFACES <= 90' 0 EAVE TO PEAK)

Iron City Structures, LLC
6731 Surlyn Court
Loveland, OH 45140

Engineer: DAZ Approved: DAZ	Date: 11/09/23
Drafter: DAZ	Date: 11/09/23
Detailer:	Date:
Checker:	Date:

☒ FOR PERMIT: THESE DRAWINGS, BEING FOR PERMIT, ARE BY DEFINITION NOT FINAL ONLY DRAWINGS ISSUED "FOR CONSTRUCTION" CAN BE CONSIDERED AS COMPLETE.

☐ FOR CONSTRUCTION: FINAL DRAWINGS.

REVISION HISTORY

REV.	DESCRIPTION	DATE

PROJECT:
TJB Manufacturing
33600 Liberty Parkway
North Ridgeville, OH 44039

CUSTOMER:
Makena Construction
104 Flat Rock Road
Bellevue, OH 44811

Project# C2203

PAGE: 17

Planning Commission Application

CITY OF NORTH Ridgeville EST 1810

SUBMITTAL INSTRUCTIONS AND PROCEDURES

Plan reviews will be carried out according to the processes described in the City's Zoning Code.

- Pre-Application. Prior to making application, applicants are recommended to contact the city to discuss their development project. City staff will outline the review process and provide a checklist of required submittals.
- Application Submittal. Following the pre-application meeting, the applicant shall submit this completed application, fee and ten (10) sets of all required exhibits. All submissions shall be made in hard copy to the Building Division. Plans shall be collated, folded and easily legible.
- Staff Review. The applicant shall attend a staff review meeting and may be required to submit additional information and/or revised plans based on staff input.
- Variances. Where zoning variances are sought by the applicant, review by the Board of Zoning and Building Appeals will be necessary prior to consideration by the Planning Commission, requiring a separate application.
- Decision or Referral. Following staff review, complete submittals for Administrative Review projects may be considered for approval. For Council Review projects, complete submittals shall be referred to the next available Planning Commission meeting, which are held the second Tuesday of each month.

PROJECT INFORMATION

35782 Center Ridge Road
Location address

07-00-021-101-068
Parcel number

B-3 and R-1
Current zoning

Phase 1 including a 9,000 sqft building, parking, Phase 2 Parking, and landscape material storage.
Proposed project

APPLICANT/AGENT INFORMATION

Aron A. Rus / Twin Power Investments LLC
Name/Company

35782 Center Ridge Road
Applicant address

440-552-8789
Applicant phone

aron76usa@yahoo.com
Applicant email

PROPERTY OWNER INFORMATION

Aron A. Rus / Twin Power Investments LLC
Name/Company

35782 Center Ridge Road
Property owner address

440-552-8789
Property owner phone

aron76usa@yahoo.com
Property owner email

AUTHORIZATION AND ACKNOWLEDGEMENT

Applicant signature

Property owner signature

I hereby authorize the City of North Ridgeville, including Planning Commission members, to view the premises and consent to their entry onto the property for the purpose of observing site conditions related to review of my application.

OFFICE	PPZ No.	Date Received	ACTION
	PPZ2024 0281	JUN 13 2024	
	Planning Fee Paid	Engineering Fee Paid	

CK # 150.00

Planning Review

July 1, 2024

Project:	Pro Care We Care Complete Landscape Services
Location:	35782 Center Ridge Road
PPN:	07-00-021-101-068
District:	B-3 Highway Commercial District/R-1 Residence District

Project Summary:

The applicant has recently purchased the subject property for his seasonal landscaping company and proposes to construct two 9,000 square foot metal buildings, parking and other site improvements for the business. An additional building is proposed in a later phase. The property is currently split zoned. The front 500-foot-deep portion of the property is zoned B-3 Highway Commercial District and the rear is zoned R-1 Residence District. This split zoning exists on the neighboring properties to the east and west, as well. The applicant proposed a rezoning of the residential portion to B-3 so that the entire lot may be used for business purposes. Planning Commission recommended the rezoning to Council at their May meeting.

The applicant is proposing phased construction. The first phase would include two buildings, driveway, parking, material storage and other site improvements, including stormwater management sized for the entire future buildout of the property. The proposed building would be placed 15 feet from the west property line. The northwest corner of the building abuts property zoned R-1; therefore, a 20-foot setback is required. The applicant will need to seek a 5-foot building setback variance from the BZBA.

While there are no required setbacks for driveways or parking lots, the zoning code does require buffering where a commercial use abuts a residential district. “Residential district” is defined as any residentially zoned land or any land with a current residential use. The required buffer strip is a 10-foot-deep area along any adjacent residential property line, which must be improved with landscape plantings to provide screening. The proposed site plan shows buffer strips improved with mounding and landscaping along both side property lines, specifically a 3-foot-high mound with Green Giant arborvitae spaced every 10 feet. To the rear of Building 1, a dumpster enclosure is provided and to the rear of Building 2, bins for landscape materials comprised of concrete barrier walls will provide containment.

One curb cut is proposed, which meets the required width, despite the narrow lot frontage. Sufficient parking is provided based upon the applicant’s indication of number of employees. No customer traffic is expected at the site. A truck turn exhibit was provided. The applicant indicated that the only lighting to be provided will be limited to building lighting. Full cut off fixtures are required and no light may bleed over any residential property line.

Planning Commission Comment Sheet

CITY OF NORTH Ridgeville EST 1810

PROJECT INFORMATION

Construct a 9,000 sq ft building, parking and landscape material storage (Updated Plans)

Proposed project

35782 Center Ridge	07-00-021-101-068
Location	Parcel number
July 9, 2024	June 19, 2024
Meeting date	Comments due

RECOMMENDATIONS

Type comments here. Attach additional sheets as necessary.

The revised plan now has the proper setbacks. In making these revision they have moved the building to the north and it now is partially located in the R-1 zoning district. This is not allowed until the rezoning to B-3 is completed by City Council.

SUBMITTED BY

Guy M. Fursdon	Chief Building Official
Administrative officer signature	Title

Planning Commission Bylaws Article V Section 2 – Administrative Review. All applications including those plans and maps submitted to the Commission shall be referred to Administrative Officers. Comments and recommendations by Administrative Officers, if any, shall be forwarded to the Secretary not later than ten (10) calendar days after receipt. Administrative Officers who have not acted within the allotted time shall be deemed to have concurred with plans as submitted.

Staff Meeting Bulletin

Meeting Date:	April 29, 2024
Project:	35782 Center Ridge Rd, North Ridgeville, OH 44039
Applicant:	Kevin Urig, 4436 Center Ridge Rd, Avon, OH 44011
Zoning:	B-3 Highway Commercial District and R-1 Residence District
In Attendance:	Kim Lieber, Planning & Development Director Guy Fursdon, Chief Building Official Lori Birschbach-Tober, Assistant Engineer Tina Wieber, Deputy Clerk of Council Aron Rus, Pro Care We Care Landscaping George Webb, Bramhall Engineering Kevin Urig, KMU

Project Introduction

- George explained that in response to the comments they added a substantial amount of buffering along most of the perimeter of the site to make sure that it was hidden, and they shifted the drive to the west to allow more buffer area to the residential piece to the east. Impervious surface has been reduced. They pushed the storage bins further to the north. They are in the process of discussing their tie in at the sanitary easement with the dentist that owned the neighboring property. He stated they understood lighting was a concern, but there would not be poles in the lot just wall packs.
- Aron discussed that he was currently on Mills Road and had been leasing there for the past 10 years since 2014. He stated that they were never able to get an agreement with the owner to purchase the property. He explained that the property did not have a gate and that he had to install his own security cameras after two trailers full of equipment were stolen from that site. He mentioned that the proposed property would be more secluded and secure.

Staff Comments

- Kim asked to clarify what construction would be included in phase one. George stated that the plan would be to get the pavement and first building constructed at first with the second building installed in 2025. The two buildings would be identical. The final phase would be well into the future in 2028 to 2030. Kim asked about the pad for the second building being and if it would be hard surface and not just dirt. Aron stated that they would leave it in a condition that was acceptable and all the buffering would be installed up through the paved area at that point.
- Kim said it looked like setbacks along the west property line were improved. George stated that they were at 15 feet and that it used to be 10 feet but they increased it to get room for buffering. Kim stated that for the building there would be a 5-foot variance, but for the remainder of that 10-foot buffer to pavement, all that met required setback for the entire depth of the lot. She mentioned that on the east side the setback was slightly variable and looked like at some point it was an 18.9-foot setback and asked if that was the skinniest portion. Kevin stated that that was the narrowest point. Kim explained that they were only required to have 10 feet of buffering but that additional area would provide sufficient space for the mound and the landscaping. She asked that include specific types of screening or buffering. Aron suggested arborvitae would provide the best screening.
- Kim explained that the lighting had to be full cut off and could not spill into the residential property line. George said that they would have a full photometric run to make sure that didn't happen.

Next Steps

- The applicant will submit any updated plans by Monday, July 1.

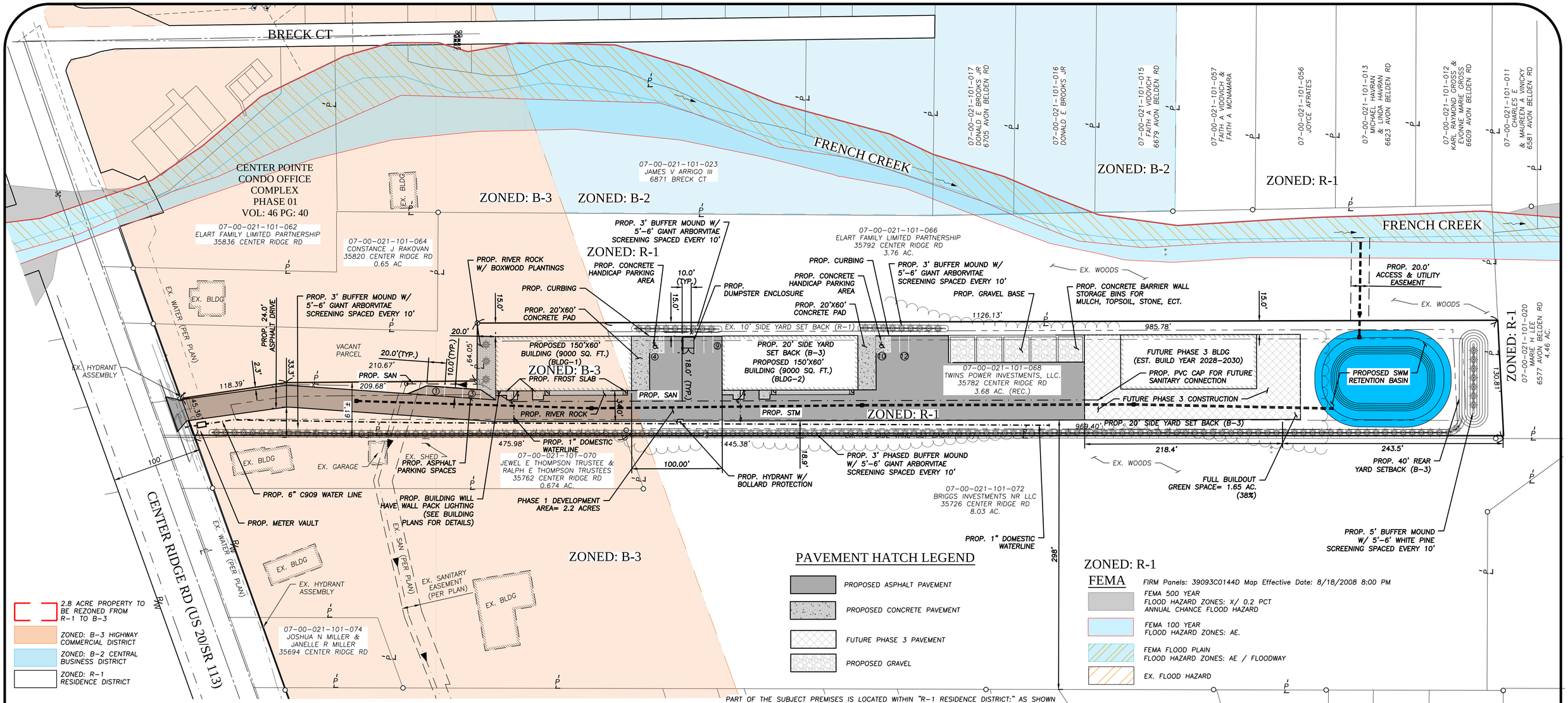

PART OF THE SUBJECT PREMISES IS LOCATED WITHIN "B-3 HIGHWAY COMMERCIAL DISTRICT:" AS SHOWN ON THE ZONE MAP OF THE CITY OF NORTH RIDGEVILLE. FIGURES IN PARENTHESES ARE REFERENCE TO THE SECTIONS IN THE CODIFIED ORDINANCES OF NORTH RIDGEVILLE – PLANNING AND ZONING CODE; OTHERWISE, ZONING REQUIREMENTS SHOWN ARE OBTAINED FROM THE AFOREMENTIONED ZONE MAP.

1268.03 BUILDING HEIGHT

65 FEET MAX

1268.04 LOT AND YARD REQUIREMENTS

(A) REQUIRED LOT AREA AND WIDTH.
LOT AREA – 1 ACRE MIN
LOT WIDTH – 150 FEET MIN

(B) REQUIRED YARDS
FRONT YARDS – 50 FEET MIN
REAR YARDS – 40 FEET MIN
SIDE YARDS – THERE SHALL BE TWO SIDE YARDS FOR EACH LOT IN A B-3 DISTRICT, THE SUM OF WHICH SHALL BE NOT LESS THAN THIRTY-FIVE FEET, AND EACH SIDE YARD SHALL BE NOT LESS THAN FIFTEEN FEET, EXCEPT AS OTHERWISE PROVIDED IN THIS ZONING CODE. WHERE ANY SIDE LOT LINE ADJOINS A RESIDENTIAL DISTRICT, THE SIDE YARD ADJACENT TO THAT LOT LINE SHALL BE NOT LESS THAN TWENTY FEET.

1268.05 LOT COVERAGE

BUILDINGS, TOGETHER WITH THEIR ACCESSORY USES, SHALL COVER NOT MORE THAN TWENTY-FIVE PERCENT OF THE AREA OF THE LOT.

1268.07 OFF-STREET PARKING AND LOADING

PROVISIONS RELATING TO OFF-STREET PARKING AND LOADING IN A B-3 HIGHWAY COMMERCIAL DISTRICT SHALL BE AS PROVIDED IN CHAPTER 1285.

1285.03 REQUIRED PARKING SPACES

FROM TABLE 1285.03-1:

OFFICES, PROFESSIONAL – 1 PER 400 SQUARE FEET

PHASE 1 – 800 SQUARE FEET OF OFFICE SPACE – 2 SPACES PROVIDED
PHASE 2 – ASSUMED 800 SQUARE FEET OF OFFICE SPACE– 2 SPACES PROVIDED
(BUILDING PLANS AND FINAL DEVELOPMENT PLANS TO BE PROVIDED IN THE FUTURE)
WAREHOUSE AND STORAGE ESTABLISHMENTS – 0.5 PER EMPLOYEE PLUS SPACES FOR BUSINESS VEHICLES

PHASE 1 & 2 – 8 ASSUMED EMPLOYEES – 4 SPACES PROVIDED, 4 ADDITIONAL SPACES FOR BUSINESS VEHICLES.

12 TOTAL SPACES PROVIDED.

PART OF THE SUBJECT PREMISES IS LOCATED WITHIN "R-1 RESIDENCE DISTRICT:" AS SHOWN ON THE ZONE MAP OF THE CITY OF NORTH RIDGEVILLE. FIGURES IN PARENTHESES ARE REFERENCE TO THE SECTIONS IN THE CODIFIED ORDINANCES OF NORTH RIDGEVILLE – PLANNING AND ZONING CODE; OTHERWISE, ZONING REQUIREMENTS SHOWN ARE OBTAINED FROM THE AFOREMENTIONED ZONE MAP.

1250.03 BUILDING HEIGHT

35 FEET MAX

1250.04 LOT AND YARD REQUIREMENTS

(A) REQUIRED LOT AREA AND WIDTH.
LOT AREA – 1 ACRE MIN
LOT WIDTH – 150 FEET MIN

(B) REQUIRED YARDS
FRONT YARDS – 50 FEET MIN
REAR YARDS – 50 FEET MIN
SIDE YARDS – THE SUM OF THE SIDE YARDS FOR A SINGLE-FAMILY RESIDENCE SHALL BE NOT LESS THAN TWENTY FEET, AND NEITHER SIDE YARD SHALL BE LESS THAN TEN FEET. THE SUM OF THE SIDE YARDS FOR A TWO-FAMILY DWELLING SHALL BE NOT LESS THAN FORTY FEET, AND NEITHER SIDE YARD SHALL BE LESS THAN TWENTY FEET.
FRONTAGE. – NO DWELLING SHALL BE ERECTED ON A LOT HAVING FRONTAGE OF LESS THAN SIXTY FEET AT THE RIGHT-OF-WAY LINE, UNLESS SUCH LOT WAS DESIGNATED ON A RECORDED PLAT OR SEPARATELY OWNED ON THE EFFECTIVE DATE OF THIS ZONING CODE (ORDINANCE 335-66, PASSED JULY 5, 1966) AND CANNOT BE PRACTICALLY ENLARGED TO COMPLY WITH THIS REQUIREMENT. FURTHER, SAID LOT SHALL NOT DIMINISH TO LESS THAN SIXTY FEET FROM THE RIGHT-OF-WAY LINE TO THE BUILDING.

1250.06 OFF-STREET PARKING AND LOADING

PROVISIONS RELATING TO OFF-STREET PARKING AND LOADING IN AN R-1 RESIDENCE DISTRICT SHALL BE AS PROVIDED IN CHAPTER 1285.

GRAPHIC SCALE
0 25 50 100
(IN FEET)
SCALE: 1" = 50'

REVISION DATE:	BY:	DESCRIPTION:
02-02-2024	APA	ISSUE TO CITY FOR REVIEW
03-05-2024	APA	ISSUE TO CLIENT FOR REVIEW
03-19-2024	APA	ISSUE TO CLIENT FOR REVIEW
03-29-2024	APA	ISSUE TO CLIENT FOR REVIEW
04-05-2024	APA	ISSUE TO CITY FOR REVIEW
04-30-2024	APA	REVISED PER CITY COMMENTS
05-02-2024	APA	REVISED PER CITY COMMENTS
06-26-2024	APA	REVISED PER CITY COMMENTS

DRAWN BY: GEW
CHECKED BY: APA

BRAMHALL
ENGINEERING AND SURVEYING COMPANY
801 MOORE ROAD AVON, OHIO 44011
(440) 934 - 7878 (440) 934 - 7879 FAX

PREPARED FOR:
TWINS POWER INVESTMENTS, LLC.
35782 CENTER RIDGE RD,
NORTH RIDGEVILLE, OH 44039

PRO CARE WE CARE LANDSCAPING FACILITY
OVERALL EXHIBIT
CITY OF NORTH RIDGEVILLE, COUNTY OF LORAIN, STATE OF OHIO

SHEET 1 OF 2
JOB NO. 23-6079

J:\23\6079 35782 CENTER ROAD NR\DRAWINGS\23-6079 35782 CENTER ROAD OVERALL EXHIBIT.dwg, Plotted: Jun 26, 2024 - 11:46am

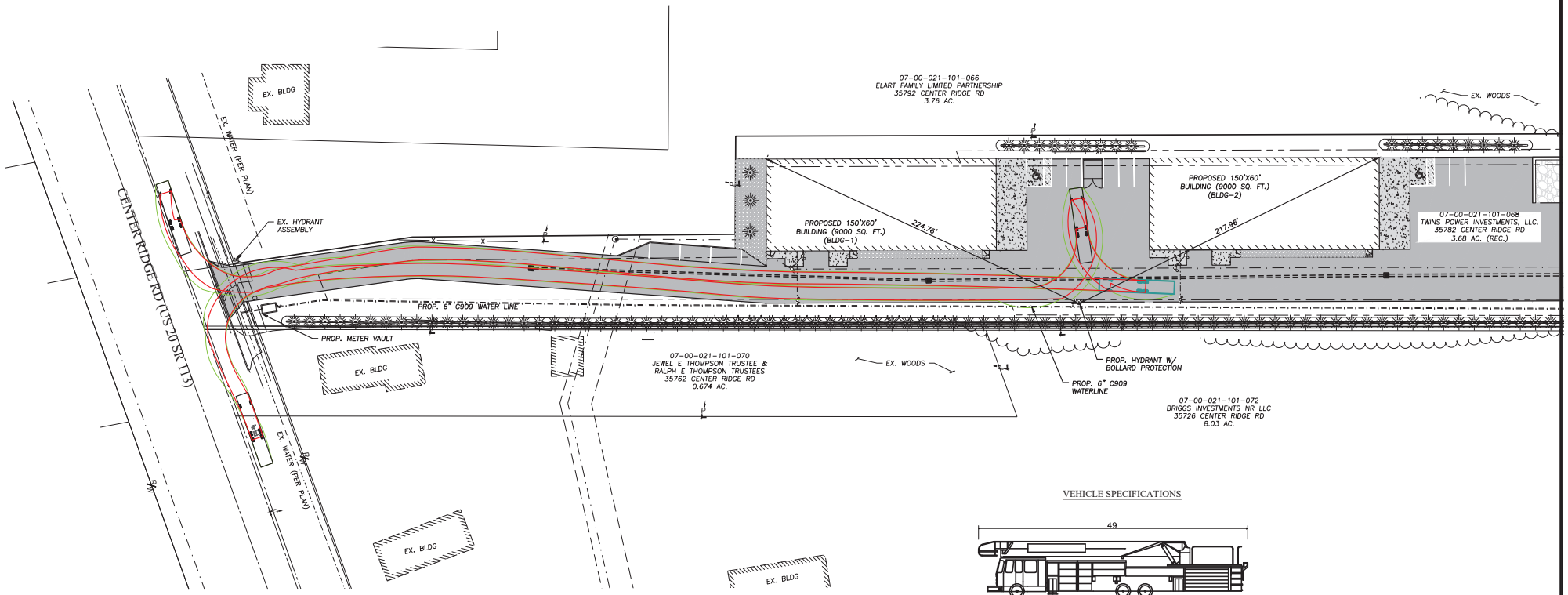

VEHICLE SPECIFICATIONS

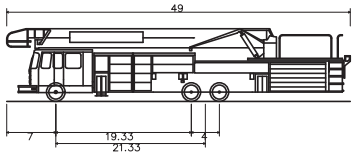

Fire Truck	
Overall Length	49.000ft
Overall Width	8.330ft
Overall Body Height	10.363ft
Min Body Ground Clearance	0.794ft
Track Width	7.610ft
Lock-to-lock time	6.00s
Max Steering Angle (Virtual)	30.90°

PAVEMENT HATCH LEGEND

- PROPOSED ASPHALT PAVEMENT
- PROPOSED CONCRETE PAVEMENT
- FUTURE PHASE 2 PAVEMENT
- FUTURE PHASE 3 PAVEMENT
- PROPOSED GRAVEL

LINETYPE LEGEND

- VEHICLE WHEEL PATH
- VEHICLE BODY PATH

GRAPHIC SCALE

0 15' 30' 60'

(IN FEET)

SCALE: 1" = 30'

REVISION	DATE:	BY:	DESCRIPTION:
	02-02-2024	APA	ISSUE TO CITY FOR REVIEW
	03-05-2024	APA	ISSUE TO CLIENT FOR REVIEW
	03-19-2024	APA	ISSUE TO CLIENT FOR REVIEW
	03-29-2024	APA	ISSUE TO CLIENT FOR REVIEW
	04-05-2024	APA	ISSUE TO CITY FOR REVIEW
	04-30-2024	APA	REVISED PER CITY COMMENTS
	05-02-2024	APA	REVISED PER CITY COMMENTS
	06-26-2024	APA	REVISED PER CITY COMMENTS

DRAWN BY: GEW

CHECKED BY: APA

BRAMHALL
ENGINEERING AND SURVEYING COMPANY
801 MOORE ROAD AVON, OHIO 44011
(440) 934 - 7878 (440) 934 - 7879 FAX

PREPARED FOR:

TWINS POWER INVESTMENTS, LLC.
35782 CENTER RIDGE RD,
NORTH RIDGEVILLE, OH 44039

PRO CARE WE CARE LANDSCAPING FACILITY
FIRE TRUCK EXHIBIT
CITY OF NORTH RIDGEVILLE, COUNTY OF LORAIN,
STATE OF OHIO

SHEET 2 OF 2

JOB NO. 23-6079

J:\23\6079 35782 CENTER ROAD NRIDGE\WORK\23-6079 35782 CENTER RD AD OVERALL EXHIBIT.dwg, Plotted: Jun 26, 2024 - 11:47am

BOUNDARY SURVEY

OF PART OF ORIGINAL RIDGEVILLE TOWNSHIP LOT NO. 21
CITY OF NORTH RIDGEVILLE, COUNTY OF LORAIN
STATE OF OHIO

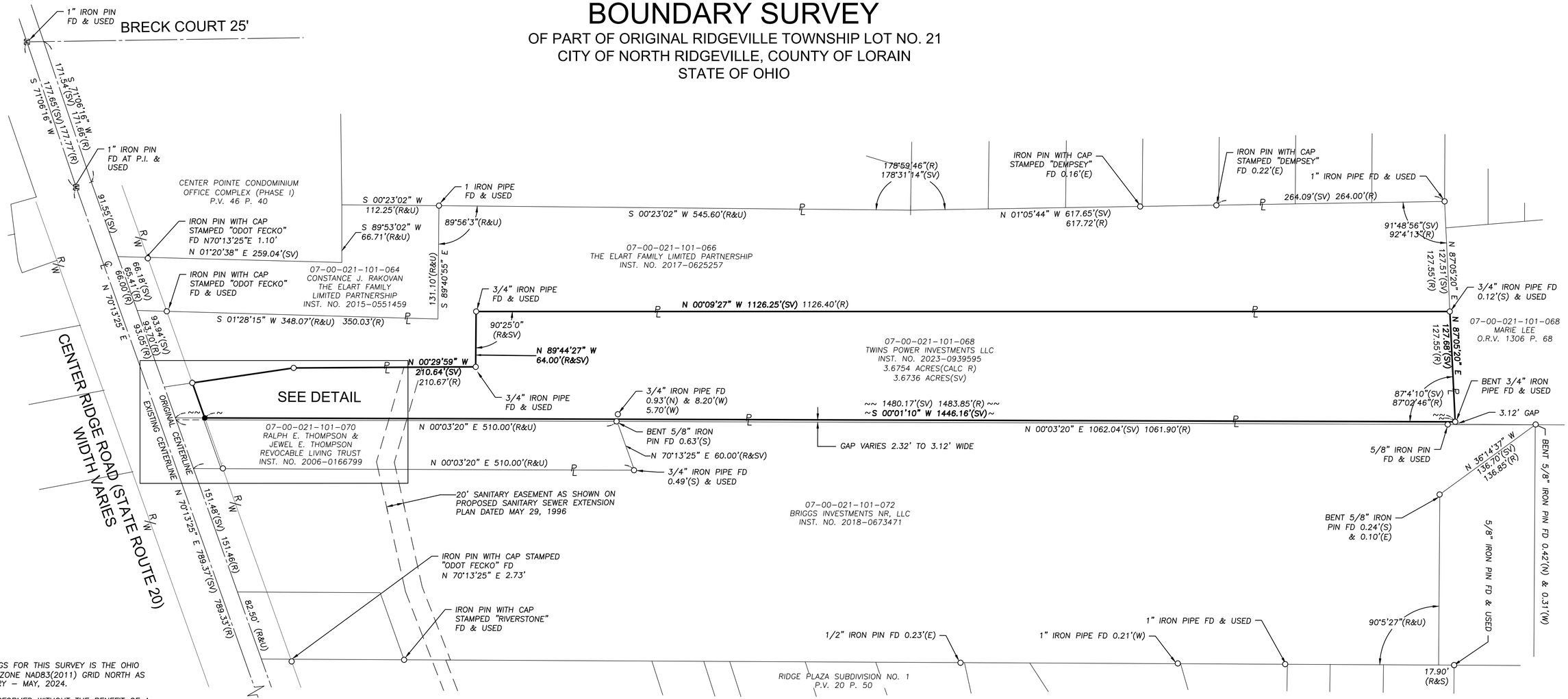

NOTES:

1. THE BASIS OF BEARINGS FOR THIS SURVEY IS THE OHIO STATE PLANE, NORTH ZONE NAD83(2011) GRID NORTH AS SURVEYED IN FEBRUARY – MAY, 2024.
2. THIS SURVEY WAS PERFORMED WITHOUT THE BENEFIT OF A TITLE COMMITMENT. A SEARCH OF EASEMENTS WAS NOT CONDUCTED BY BRAMHALL ENGINEERING AND SURVEY COMPANY.
3. PERTINENT RECORDS USED ARE AS SHOWN HEREON AND INCLUDE LORAIN COUNTY SURVEY RECORDS AND TAX MAPS.

SURVEYOR'S CERTIFICATE:

I HEREBY CERTIFY THAT THE SURVEY SHOWN HEREON IS THE RESULT OF AN ON-THE-GROUND SURVEY THAT HAS BEEN PREPARED BY ME OR UNDER MY SUPERVISION AND THAT THIS SURVEY WAS PREPARED IN ACCORDANCE WITH CHAPTER 4733-37 (STANDARDS FOR BOUNDARY SURVEYS) OF THE OHIO ADMINISTRATIVE CODE.)

AMY M. KELLY, P.S. 6/19/2024 DATE
REGISTERED OHIO SURVEYOR No. 8469

STATE OF OHIO AMY M. KELLY S-8469 REGISTERED PROFESSIONAL LAND SURVEYOR

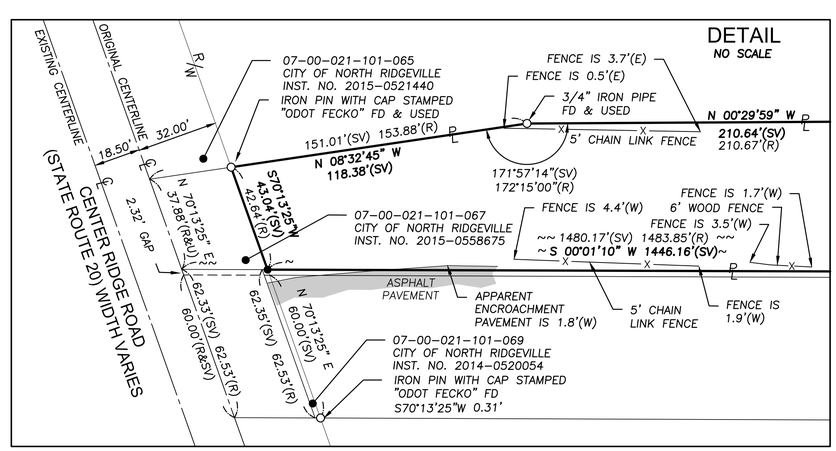

GRAPHIC SCALE
0 30 60 120
(IN FEET)
SCALE: 1" = 60'

LEGEND

● 5/8" x 30" IRON PIN WITH CAP STAMPED "BRAMHALL ENG. & SURV." SET	(CALC R) CALCULATED FROM RECORD INFORMATION
○ IRON PIN/PIPE FOUND AS INDICATED	FD FOUND
MB MONUMENT BOX WITH IRON PIN FOUND AS INDICATED	INST. INSTRUMENT
℄ CENTERLINE	NO. NUMBER
R/W RIGHT-OF-WAY LINE	ORV OFFICIAL RECORD VOLUME
PL PROPERTY LINE	P PAGE
	PI POINT OF INTERSECTION
	PV PLAT VOLUME
	(M) MEASURED INFORMATION
	(R) RECORD INFORMATION
	(SV) SURVEYED INFORMATION
	(U) USED INFORMATION
	(N) NORTH
	(S) SOUTH
	(E) EAST
	(W) WEST

REVISION	DATE:	BY:	DESCRIPTION:
	24-06-19	AMK	ISSUE TO CLIENT

DRAWN BY: MAM
CHECKED BY: AMK

BRAMHALL
ENGINEERING AND SURVEYING COMPANY
801 MOORE ROAD AVON, OHIO 44011
(440) 934 - 7878 (440) 934 - 7879 FAX

SHEET 1 OF 1
JOB NO. 23-6079

J:\236079 35782 CENTER ROAD NR\DRAWING\S23-6079. Boundary Plat.dwg, Plotted: Jun 19, 2024 - 12:34pm

SANITARY SEWER

1. Roof drains, foundation drains, and other clean water connections to the sanitary sewer are prohibited.
2. The sanitary sewer shall pass a low pressure air test and a 5% deflection test. These tests shall be conducted by a competent tester, preferrably an independent testing company.
   A. The deflection test shall be conducted no sooner than 30 days after installation.
   B. The rigid ball or mandrel used for the deflection test shall have a diameter not less than 95% of the base inside diameter or average inside diameter of the pipe depending on which is specified in the ASTM specification, including the appendix, to which the pipe is manufactured. The pipe shall be measured in compliance with ASTM D2122.
   C. The leakage, exfiltration or infiltration, shall not exceed 200 gallons per inch of pipe diameter per mile per day. 100 MG SEPA 6/12/96
3. The sanitary sewer main shall be PVC meeting ASTM D3034 with gasketed joints meeting ASTM D3212.

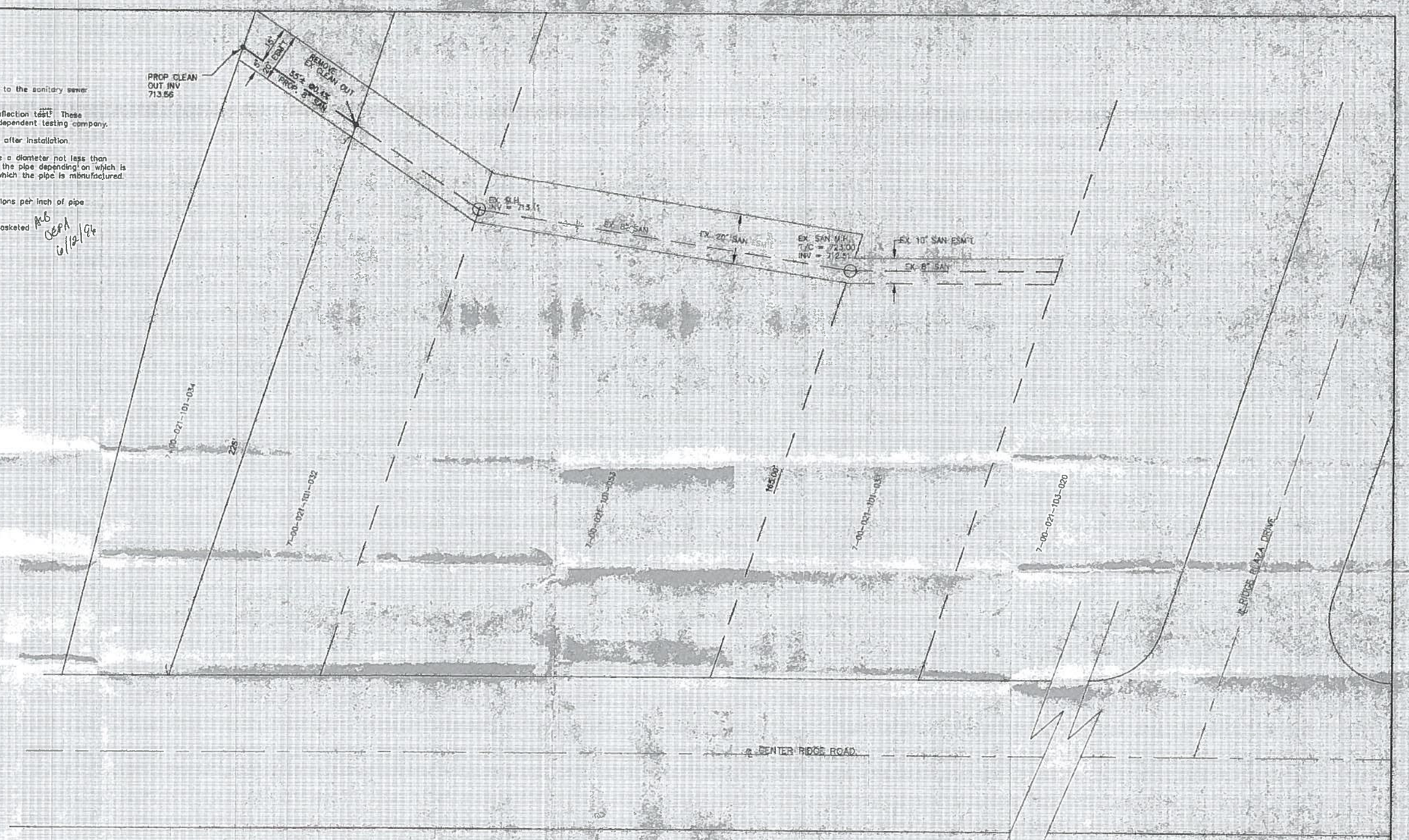

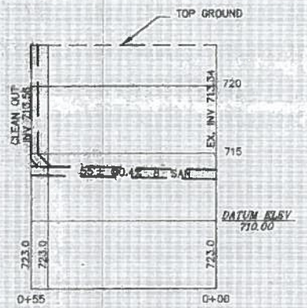

PROFILE OF EXTENSION
VERTICAL SCALE 1" = 5'

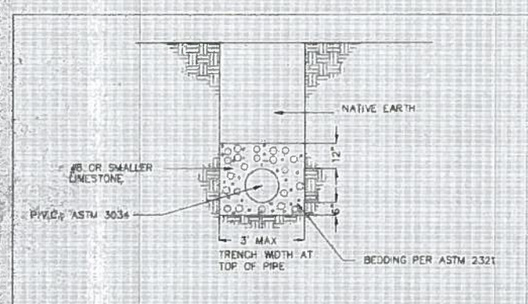

SANITARY SEWER TRENCH MAIN
NO SCALE

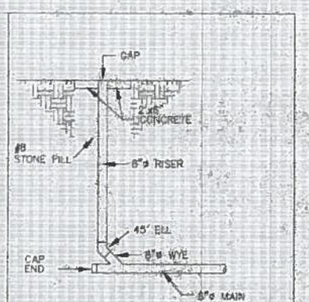

CLEAN-OUT DETAIL
NO SCALE

SANITARY SEWER EXTENSION FOR CENTER RIDGE ROAD
CITY OF NORTH RIDGEVILLE COUNTY OF LORAIN STATE OF OHIO

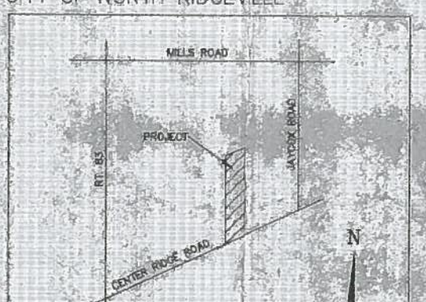

LOCATION MAP
NO SCALE

CITY OF NORTH RIDGEVILLE

CITY ENGINEER

GRAPHIC SCALE
(IN FEET)
1 inch = 20 ft.

MAY 28, 1996

SEWERAGE APPROVED
OHIO ENVIRONMENTAL PROTECTION AGENCY
AS EVIDENCED BY
LETTER OF APPROVAL

STATE OF OHIO
REGISTERED
PROFESSIONAL ENGINEER

BOSWORTH
PIN 7-00-021-101-034

PROPOSE SANITARY SEWER EXTENSION

MICHAEL TURNER & ASSOCIATES
30800 CENTER RIDGE ROAD
NORTH RIDGEVILLE, OHIO 44039
PH (216) 327-7700
FAX (216) 327-7700

SHEET 08

P.N.: 264.00 DRAWING CODE: 264SPSUPG

Division of Surface Water - Notice of Intent (NOI) For Coverage Under Ohio *Environmental Protection Agency General NPDES Permit*

(Read accompanying instructions carefully before completing this form.)

Submission of this NOI constitutes notice that the party identified in Section I of this form intends to be authorized to discharge into state surface waters under Ohio EPA's NPDES general permit program. Becoming a permittee obligates a discharger to comply with the terms and conditions of the permit. Complete all required information as indicated by the instructions. Do not use correction fluid on this form. Forms transmitted by fax will not be accepted. A check for the proper amount must accompany this form and be made payable to "Treasurer, State of Ohio." (See the fee table in Attachment C of the NOI instructions for the appropriate processing fee.)

I. Applicant Information/Mailing Address

Company (Applicant) Name: Twins Power Investments, LLC.

Mailing (Applicant) Address: 34303 Mills Road

City: North Ridgeville	**State :** OH	**Zip Code:** 44039
Country: USA		
Contact Person: Aron Rus	**Phone:** (440) 552-8789	**Fax:**
Contact E-mail Address: procare-wecare@hotmail.com		

II. Facility/Site Location Information

Facility/Site Name: 35782 Center Ridge Road

Facility Address: 35782 Center Ridge Road

City: North Ridgeville	**State:** OH	**Zip Code:** 44039
County: Lorain	**Township:**	
Facility Contact Person: Kevin Urig	**Phone:** (440) 934-1008	**Fax:**
Facility Contact E-mail Address: kmukevin@gmail.com		
Latitude: 41.39114	**Longitude:** -82.016154	**Facility/Map Attachment** NOI Vicinity Map-NOI Map.pdf

Receiving Stream or MS4: French Creek

III. General Permit Information

General Permit Number: OHC000006	**Coverage Type:** New
Type of Activity: Construction Site Stormwater General Permit	**SIC Code(s):**
Existing NPDES Facility Permit Number: 3GC15185*AG	**ODNR Coal Mining Application Number:**
If Household Sewage Treatment System, is system for:	**New Home Construction:** / **Replacement of failed existing system:**

Outfall	Design Flow (MGD):	Associated Permit Effluent Table:	Receiving Water :	Latitude	Longitude

Are These Permits Required?	**PTI:** YET_TO_APPLY	**Individual 401 Water Quality Certification:** NO
Individual NPDES: NO	**Isolated Wetland:** NO	**U.S. Army Corp Nationwide Permit:** NO
Proposed Project Start Date(if applicable): June 03, 2024		**Estimated Completion Date(if applicable):** December 01, 2028
Total Land Disturbance (Acres): 3.6800		**MS4 Drainage Area (Sq. Miles):**

SWP3 Attachment(s): <None>

IV. Payment Information

Check #:	**For Ohio EPA Use Only**
Check Amount:	**Check ID(OFA):**_____ **ORG #:**_____
Date of Check:	**Rev ID:**_____ **DOC #:**_____

I certify under penalty of law that this document and all attachments were prepared under my direction or supervision in accordance with a system designed to assure that qualified personnel properly gather and evaluate the information submitted. Based on my inquiry of the person or persons who manage the system, or those persons directly responsible for gathering the information, the information submitted is, to the best of my knowledge and belief, true, accurate and complete. I am aware that there are significant penalties for submitting false information, including the possibility of fine and imprisonment for knowing violations.

Applicant Name (printed or typed):	**Title:**
Signature:	**Date:**

ADDITIONAL INFORMATION

Please add any additional comments or attachments below.

July 2, 2024

Pro Care We Care Landscaping

Proposed Site Development - 35782 Center Ridge Road Twin Power Investments LLC

A brief overview of our company and history.

- The company was established in North Olmsted in 2007 and I was doing the old school advertisement, leaving fliers in the mailboxes and I was the only employee doing all the work.
- I was able to slowly expand each year and starting with the year of 2009 I had 2 full time employees for the next few seasons. I rented a property on Lorain Rd. and after 5 years we outgrew the space and we moved to North Ridgeville to our current leased property on Mills Rd.
- I added 3 more employees along the way since the business was growing based on our continuous commitment and craftsmanship on everything we do.
- A few years back, during Covid years, we had a theft at our current property loosing 2 complete set ups of full size dump trucks and landscape trailers fully loaded with equipment. It was difficult to bounce back especially around those tough Covid times with no inventory of any kind out on the market.
- Never gave up, worked even harder, hired 2 more employees and have had over 1,500 customers so far since the start of the company 17 years ago. Along the way, We have built in many cases long term relationships and continuous workflow with most of our clients.
- I tried a few times since the incident to purchase and fully develop the Mills Road Site to fit the company needs the actual property from the landlord, but I was never able to come to an agreement with him even though he was interested at times, but never committed. We also asked for improvements of the property, but the landlord was not agreeing to invest any time or money in it. Even the maintenance of the property is fully on us at this point, which the other tenants are aware of.
- I was very excited when the property on Center Ridge came up for sale because I can make it fit my company's needs a lot better since it's 3 times the size, but has a very unique shape and it took a lot of architectural thoughts and arrangements to make it work. It was a good use for the site since to the east there was another landscape company also.
- I intend to continue to grow the company and offer a variety of quality landscape and hardscape services to all the Western Suburbs along with job opportunities. The great reputation and all the positive reviews on our website, Angie's list, Next door , Yelp, Google reviews and many more sites is giving me the confidence that this company will keep growing and we have trust in so many residential and commercial customers; condominiums and home owner associations.
- We are a seasonal operation company with a minimal level of noise during the bulk of the work days. We will be spending just roughly one hour in the mornings and afternoons on the property when we start and finish our work days. No activities on the property on Sundays, Holidays and winter months.
- There will be no outside sales of bulk materials to residents and no commercial sales. The only stored materials will be used by our employees on our own projects for customers.

- Ou customer base is primarily residential and commercial with projects on the west side of Cleveland including in North Ridgeville, Avon, Avon Lake, Westlake, North Olmsted, Olmsted Falls, Bay Village and many other communities.
- I love what I do, and I am looking forward to expanding and moving my business to a property that I own, develop and fully maintain to fit my needs and happy to stay in a safe community and continuously growing city.

Sincerely,

Aron A. Rus, Owner,

440-552-8789

Existing Clean and well maintained site at 34303 Mills Road, North Ridgeville Early May 2024

Existing Clean and well maintained site at 34303 Mills Road, North Ridgeville Early May 2024

Existing Clean and well maintained site at 34303 Mills Road, North Ridgeville Early May 2024

Existing Clean and well maintained site at 34303 Mills Road, North Ridgeville Early May 2024

Proposed Site Development - 35782 Center Ridge Road Twin Power Investments LLC

Center Ridge Road

Drone Picture July 2024

Drone Picture July 2024

Drone Picture July 2024

Drone Picture July 2024

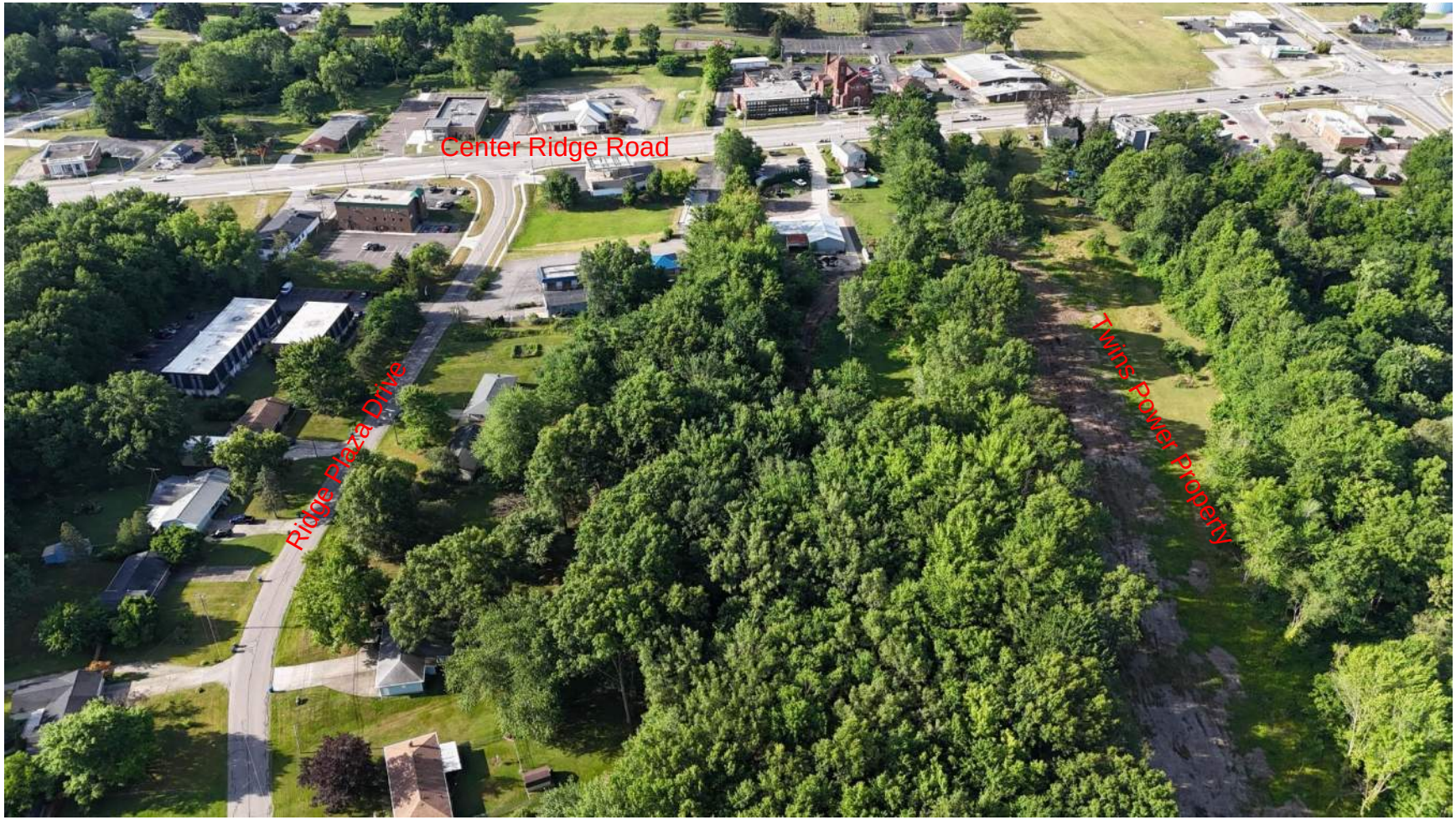

Drone Picture July 2024

Drone Picture July 2024

Drone Picture July 2024

Center Ridge Road

Drone Picture July 2024

Center Ridge Road

Drone Picture July 2024

Center Ridge Road

Drone Picture July 2024

Center Ridge Road

Drone Picture July 2024

Center Ridge Road

Drone Picture July 2024

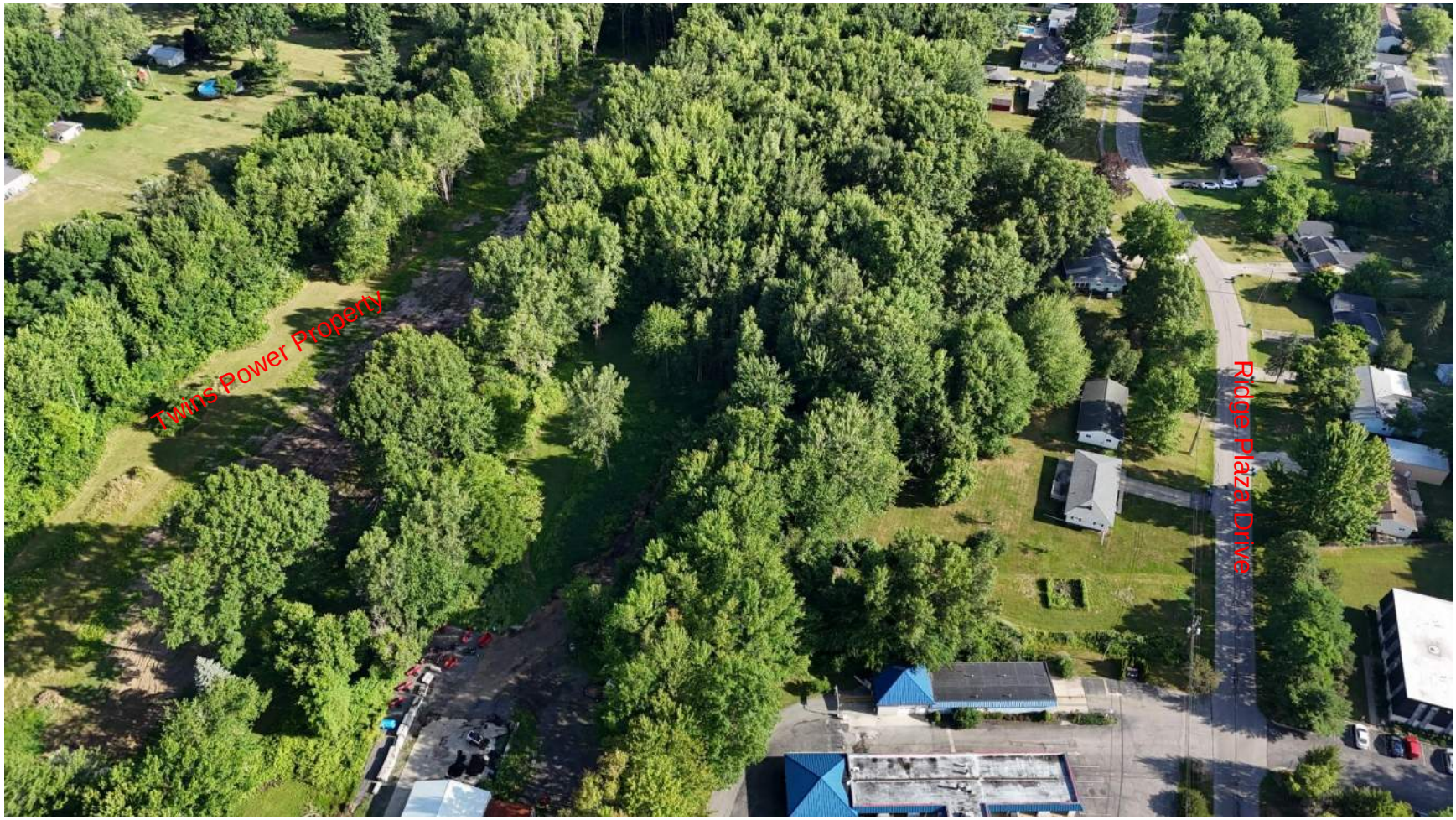

Center Ridge Road

Drone Picture July 2024

Arborvitae screening used in Westlake Forest Lake Development

Arborvitae screening used in Westlake Forest Lake Development

Complete landscape and hardscape project in Columbia Station

Complete landscape and hardscape project in Columbia Station

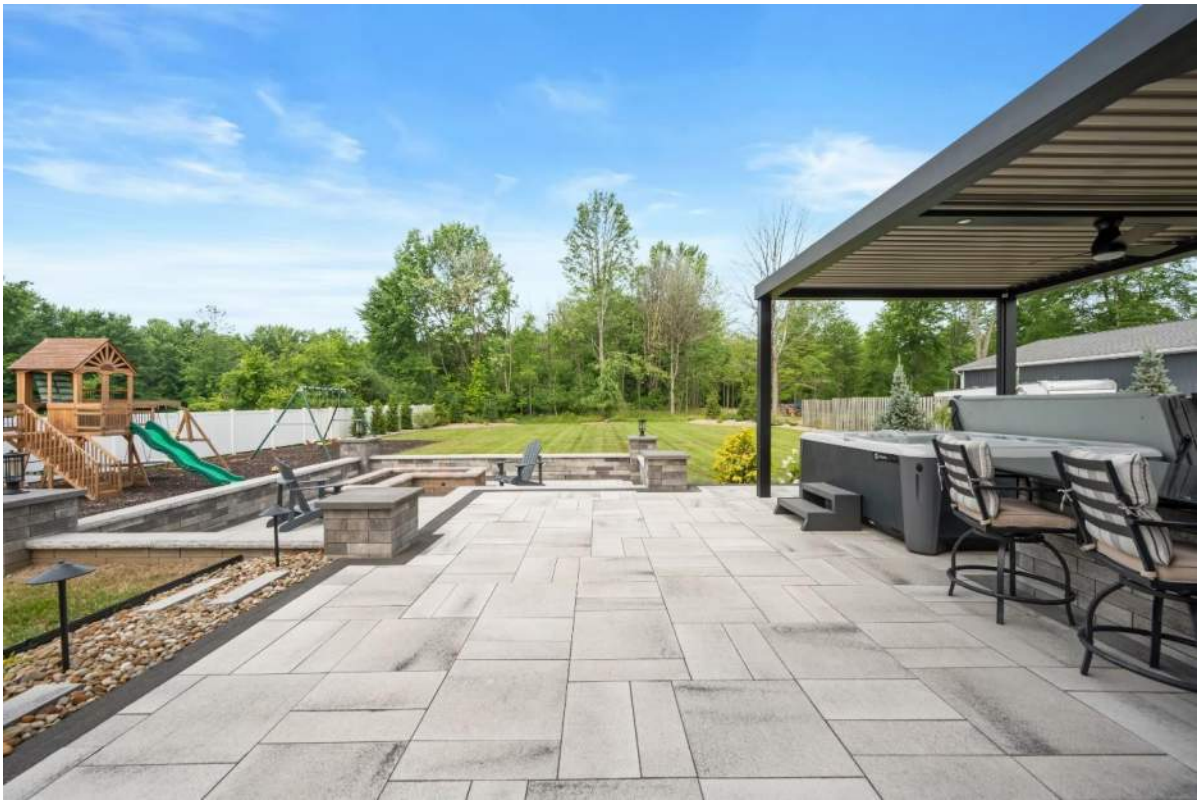

Green giants arborvitae used for screening in Avon Red Tail Development

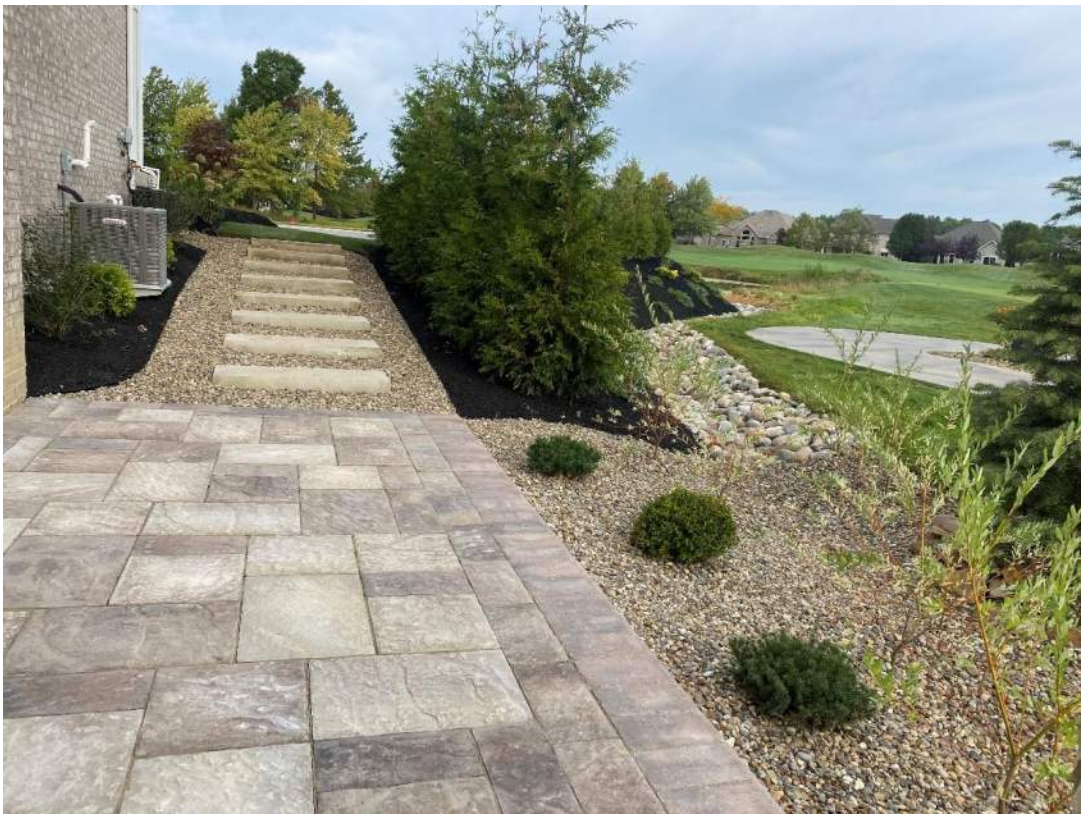

Green giants arborvitae used for screening in Avon Red Tail Development

Complete landscape and hardscape installation in Avon Red Tail Development

Complete landscape and hardscape installation in Avon Red Tail Development

Complete landscape and hardscape installation in Avon Red Tail Development

Complete landscape and hardscape installation in Avon Red Tail Development

Hardscape project in Avon Red Tail Development

Hardscape project in Avon Red Tail Development

Hardscape project in Avon Red Tail Development

Complete landscape and hardscape project in Avon Red Tail Development

Complete landscape and hardscape project in Avon Red Tail Development

Complete landscape and hardscape project in Avon Red Tail Development

Complete hardscape project in Olmsted Falls

Complete hardscape project in Olmsted Falls

Complete hardscape project in Olmsted Falls

Complete hardscape project in Olmsted Falls